Reliability Society

NEWSLETTER

Vol. 52, No. 1, February 2006

CONTENTS

President's Message

Dear Reliability Society Members,

This is my first President's *Newsletter* message, and it gives me great privilege to begin this new role in service to you all. I thank you for trusting in me for this position.

As the first order of business, I would like to formerly acknowledge my confidant, supporter, scheduler, and my highest priority, my wife Debra. Without her this position for me would not be possible.

While times were not always pleasant for the Society during these past years, we have stayed together as a group, and we are in far better shape than we were three years ago. Your Administrative Committee (ADCOM) leadership continues to look forward, as opposed to looking back. We remain focused on the future of reliability. Our executive team this year consists of: Dennis Hoffman: senior past president, Jeff Voas: junior past president, Bill Tonti: president, Shuichi Fukuda: VP of technical operations, Christian Hansen: VP of publications, Sam Keene, VP of meetings, Marsha Abramo: VP of membership, Richard Doyle: treasurer, and Alan Street: secretary. Serving with the executive team are our ADCOM members: Way Kuo: editor in chief of TREL, Scott Abrams: business manager, Lon Chase: newsletter editor, Scott Tamashiro: webmaster, Bob Stoddard, Jeff Clark, John English, Ted Freeman, Lou Gullo, John Healy, Robert Loomis, Brett Michael, Ann Miller, Jim McLinn, and Alfred Stevens.

Together this team established the 2006 initiatives that are planned within the society. The entire team is distributed among the initiatives; acting in the capacity of a technical expert, or on the business side in terms of managing the schedule and the deliverables. This will be an exciting year for us, as these projects become a reality within the society, and become a resource for you, the society me members. As you peruse the list of items below, I urge you to contact the folks identified as the leads and offer your assistance.

Without further adieu, here are the new initiatives:

- **IEEE Grand Challenge:** The IEEE Foundation will fund a Cybersecurity grand challenge this year. The challenge was incubated through two Reliability Society members, Dr. John Viega and Dr. Jeff Voas. It consists of a simulated attack on the internet, and the associated attack measures and countermeasures that can be used to enhance the attack and to thwart it. This project has IEEE and industry momentum, and has the potential of becoming a highly regarded technical activity. The leads for this project are John Viega , Jeff Voas, and William Tonti.
- **Region 10 Reliability Conference**. The Reliability Society and the Systems Man Cybernetics Society have agreed to jointly sponsor a conference this year in Vietnam. The title of the conference is: "Systems Integration and Reliability Improvements (SIRI)". It will be held on Dec 6-8 2006 in Hanoi, Vietnam. The conference call for papers is listed on the society home page. The leads for this project are Sam Keene and Alan Street
- **Region 8 Reliability Conference**: The Reliability Society has been actively involved in determining if we can partner with an existing conference in region 8. We have ongoing meetings with one such conference. The leads for this project are Sam Keene and Alan Street
- **"Expert Now" IEEE Module:** The IEEE is presently building a library of on-line technical courses that will be available to the engineering and management community at large. The Reliability Society presently has three completed reliability modules in this library, and we plan to produce another one in 2006. The actual topic will be chosen in March 2006, where all proposals will be voted on by the ADCOM. The lead for this project is Christian Hansen.
- **New Magazine to Members:** The Society plans to publish a magazine in the areas of Software Reliability, Software Vulnerability, and Cybersecurity. This publication will be available to all society members. The leads for this project are Bret Michael and Dr. Christian Hansen.
- **Student Outreach:** The Society plans to visit selected college institutions around the country, providing technical lectures and an introduction to IEEE and the IEEE Reliability Society to all interested engineering students. The setting is intended to be informal, taking on a typical info session format. The technical lecturers will be Reliability Society ADCOM members. The leads for this project are Marsha Abramo and Jim McLinn
- **Student Scholarships**: The Reliability Society plans to award ten $1000.00 scholarships to students pursuing engineering, with

emphasis placed on those students having a strong interest in reliability engineering. The scholarships will be awarded to both undergraduate and graduate students. Submission guidelines are being defined and details will be published on the Reliability Society homepage. The leads for this project are John English and Robert Loomis

- **Systems Council:** The society voted on funding and joining the IEEE Systems Council, as their field of interest is synergetic with the societies. The Systems Council Field of Interest statement is: This Council integrates IEEE activities regarding aspects of multiple disciplines and specialty areas associated with the engineering of systems. This Council covers, but is not limited to the following: Systems engineering, education, standards, processes and methodologies; Modeling, simulation and integration related to design, testing, production and support; Design aspects for robust design, human factors, safety, security and usability; Transition of products from design to production, deployment and use; Quality control and system management; Program / product / project management interactions; Risk Management; and Systems Architecture. The leads for this project are Shuichi Fukuda and Lon Chase
- **Cyber Security Prototype:** A Cyber Security prototype fault tree module was completed in 2005. The technical lead behind this project was Bret Michael. Funding of the project was in part through the Reliability Society, with a major portion directly from IEEE headquarters. The Reliability Society wants to obtain the prototype and the resource materials and then investigate possible uses and the feasibility of those uses. The lead for the above action is Jeff Voas.
- **Technical Operations:** Tech Ops, under the leadership of Shuichi Fukuda, has a number of new initiatives, and expansions in 2006, They are as follows:
    - Biological and Shared Assurance Technical Meeting, Tokyo, Japan. The USAF has requested, and will sponsor a technical meeting on this topic. Shuichi Fukuda is spearheading this effort
    - Formation of a new MEMS (Micro Electrical Mechanical System) tech ops committee. Dr. Danielle Tanner will join tech ops as the new chair, forming a MEMS Reliability committee. Please contact Shuichi if you would like to become an active member of this technical committee.
    - Web Meetings: In an effort to keep the Tech Ops committees synergistic, Shuichi Fukuda will implement web meetings in 2006. Please consult the Reliability Society home page for upcoming details.
    - Web Asian Reliability Conference (ARC) 2006. Given the success of ARC 2005, Shuichi Fukuda and Alan Street plan to provide ARC 2006 as a web based conference, with the intent of ARC 2007 being a face to face meeting. Putting on a conference requires many hands and brains. Please contact Shuichi or Alan with regards to assisting them.
    - Appointment of Reliability Methodology Tech Ops chair: Dev Raheja. Dev has volunteered to take over this committee which has been dormant the last couple of years. Please contact Shuichi if you would like to become an active member of this technical committee.
- **Chapter Membership:** Society Chapters are independent units that technically pursue Reliability Engineering in their respective local geographic area. Promotion of chapter members and the local dissemination of reliability content are of paramount interest to the society and its members as it affords face to face meetings on topics of interest without undue travel costs, and time spent away from home. The Reliability Society plans to promote a new member stipend that is fair to both small and large chapters. The leads for this project are Lou Gullo and Marsha Abramo

So, as you can see, our initiatives for 2006 cover a broad spectrum, emulating if you will the broad nature of reliability, as reflected in the society's mission statement: "Promote recognition of the reliability profession, develop and disseminate reliability best practices, and be a resource for collaboration among reliability professionals." In the aforementioned list we have chosen items that in fact read directly on every aspect of our mission.

In addition to describing our present ADCOM and our 2006 game-plan, I'd like to close by describing two reliability greats who have imparted their time and knowledge to the society for many years.

The first is Dr. Ken Lasala, who in 2006 is now retired from the society's ADCOM. Ken served as the RS president in 1999 and in 2000, and held several executive offices prior to and after being Society President. In addition, Ken was the chair of the technical operations subcommittee "Human Interface technology" for many years. From January 2001 until the present, Dr. LaSala has been the Director of KPL Systems, an engineering consulting firm that specializes in reliability, maintainability, human factors, systems engineering, enterprise information technology, quality assurance, and software development. Ken has provided me with valuable guidance over the past seven years, and I am grateful for his leadership and his support of the Reliability Society. We will all miss Ken, and we wish him all the best.

The second person to retire from the ADCOM is affectionately known as our CFO, Dick Kowalski. Dick served in this capacity for as long as I can remember, and has kept the society's finances in good health through his tenure. Dick has many other accolades associated with the society. Some of these are summarized below.

In 1967, Dr. Richard Kowalski joined the Westinghouse Defense and Electronic Systems Center as a Senior Engineer and, later, a Fellow Engineer. He joined Arinc Research Corporation (later ARINC Incorporated) in 1974 and became a Group Manager. He was appointed a Staff Principal Engineer (SPE) and later Fellow where he was responsible for the technical and business review of selected projects and for technical review and approval of project deliverables. He was appointed Director, Quality Assurance where he was responsible for the development and execution of hardware and software quality program policy Dr. Kowalski is a Senior Life Member of the IEEE and a member of Sigma Xi. He holds an amateur extra class radio operator's license (AA3MS).

Let us wish both Dick and Ken wonderful retirements. I can tell you these two Mr. Reliabilities will be missed! But not to worry, they are still RS members, and I suspect they will remain active for many tears to come.

Regards,

William Tonti

mailto:wtonti@US.IBM.COM

From the Editor

Welcome to the IEEE Reliability Society e-Newsletter. An issue will be published quarterly and published to the Reliability Society website.

We welcome your articles, comments or questions. All RS Newsletter inputs should be sent electronically to l.chase@ieee.org.

February	*Inputs due January*
May	*Inputs due April*

August Inputs due July
November Inputs due October

Publishing of advertisements will be available in future issues. Advertisements will be accepted in common graphic format.

Top

Society Announcements

IEEE Fellows Award

Alan Plait Obituary

Society News

Congressional Fellow News

The first Asian Reliability Conference (ARC) was held in Tokyo November 2005. See the Japan Chapter Activities for the ARC05 report.

The Reliability Society held its January 2006 ExCom/Adcom meetings on January 20-21 prior to the RAMS Conference.

January 2006 Adcom Meeting Minutes

The annual Reliability Society Banquet was held Saturday January 21. The Banquet included dinner, welcome for new volunteers, and presentation of Reliability Society awards. Some of the highlights are pictured below.

Newly elected ExCom officers were welcomed -

Shuichi Fukuda (VP Tech Ops)
Sam Keene (VP Meetings)
Marsha Abramo (VP Membership)
Bill Tonti (President)

Newly elected Adcom members were welcomed -

Scott Tamashiro
Marsha Abramo
John English
Jeff Clark
Alfred Stevens
Lon Chase

Current and past society presidents

Thad Regulinski
Sam Keene
Bill Tonti
Jeff Voas
Tom Fagan
Dennis Hoffman

Reliability Society awards were presented:

Society Lifetime Achievement Award to Tom Fagan

Society Service Appreciation Awards to Richard (Dick) Kowalski, Jeff Voas, and Ken LaSala.

	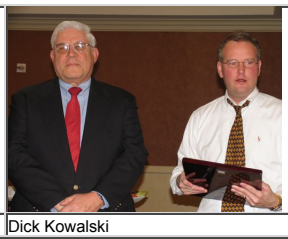	
Tom Fagan	Dick Kowalski	Jeff Voas

Top

Society Solicitations

The IEEE Reliability Society solicites nominations for the following annual society awards. More information will be provided in future newsletters closer to the submittal dates.

Reliability Society Engineer of the Year Award for 2006

Reliability Society Lifetime Achievement Award for 2006

Top

Chapter Activities

Boston

Cleveland

Dallas

Denver

Japan - Asian Reliability Conference 2005

Italy

Singapore

Twin Cities

Top

Technical Operations

Technical Committee Reports

Technical Conference Reports

Information Security Workshop 2005

Six Sigma Tutorial

see Japan Chapter for Asian Reliability Conference (ARC) 2005

Society Technical Committee Recruiting Notice

The IEEE Reliability Society national organization is recruiting technical committee members and possibly committee chairpersons for the following technical committees: Software Reliability, System Safety Technology, Human Interface Technology, Mechanical Reliability, Standards & Definitions, CAD/CAE, Microelectronic Technologies, Industrial Systems, Sensor Systems, Information Technology & Communications, Consumer Electronics, International Reliability, Aerospace & Defense Systems, Testing and Screening Technology, Automotive Systems, Energy Systems, 6 Sigma Reliability, Medical Systems, Reliability Design, Warranty, Nuclear Reliability, Maintainability Technology, Assurance Technology, and Emerging (New) Technology.

The basic work for each technical committee consists of developing plans associated with the reliability aspects of the respective field, both present day tactical issues, and long term strategic direction. This is accomplished through four short quarterly written reports that are edited and compiled by the reliability society technical operations editor, and placed in the Reliability Society newsletter, which can be found on our Web site. Additionally, an annual written assessment of the technology in the committee's area of interest is requested. This Annual state of Reliability Technology Report is published world wide, and receives a high level of readership and interest from communities that extend well beyond the IEEE and the Reliability Society. It has become the societies cornerstone publication.

Other work may include the development of standards, guidelines and educational tutorials through the society infrastructure. Working in one of the technical committees is an excellent opportunity to "network" and keep your knowledge current. If you are interested, please contact me and send a short biography with an indication of your experience in the field of interest.

If you do not have a direct interest in either of the above opportunities, please pass this to a fellow reliability, hardware, software, or systems engineering professional who might have an interest.
Thanks for your consideration.

Shuichi Fukuda
VP Technical Operations
E-mail: ShuFukuda@aol.com

Top

A list of the Technical Committees and their Chairs:
IEEE RS Technical Committees

Top

Announcements

IEEE-USA Leadership Workshop 2006

RAMS 2007 Call for Papers

IRPS 2006 (March 26 - 30, San Jose) Link

International Physics and Failure Analysis of IC Symposium 2006 (July 3-7, Singapore)

System Integration and Reliability Improvements (SIRI) 2006 (December 6-8, Hanoi) - Call for Papers

IEEE Transactions on Reliability, Special Issue on Reliability Studies on Nanotechnology (June 2006)

Fusion Conference 2006

- Fusion 2006 Brochure

Risk Management and System Dependibility & Safety Lambda Mu 15 Symposium

Top

Useful Information
Transactions on Reliability
Reliability Training
Discussion Forum
Job Postings & Resumes
What is Reliability?
Bylaws & Constitution
Chapters, Committees & Officers
Annual Technology Report
Reliability Society Newsletter
RS Blog
RS LinkedIn
Site Map
E-mail IEEE RS Web Master
JOIN NOW!

IIRW Deals With a Wide Spectrum of Semiconductor Reliability Challenges

The 2005 International Integrated Reliability Workshop (IIRW), sponsored by the IEEE Reliability Society and the IEEE Electron Devices Society, was held at the Stanford Sierra Camp on the shore of Fallen Leaf Lake near South Lake Tahoe, CA from October 17th to 20th, 2005.? This workshop provides a unique forum for open and frank discussions of all areas of reliability research and technology for present and future semi?conductor applications and was chaired by Rolf Vollertsen of Infineon.? The Technical Program of the 2005 workshop was organized by Dr. John F. Conley, Jr. of Sharp Labs of America, and focused on the main topic areas of: designing-in-reliability (products, circuits, and processes), customer product reliability requirements, root cause defects, physical mechanisms, simulations and modeling, identification and characterization of new reliability effects, and deep sub-micron transistor and circuit reliability.?

Dr. Erwin Hammerl, head of the central reliability department of Infineon Technologies, gave the Keynote Presentation entitled, "*Technology Reliability: Challenges and Affordability*". Dr. Hammerl discussed many of the reliability challenges confronting the IC

2005 IIRW Attendees

industry, including new materials, faster product introductions, and liability costs, all of which are brought on by the continued progression of transistor scaling. He discussed the need to balance reliability costs and risks, and stressed the importance of understanding customer require-ments and use conditions.

In particular, he suggested that there is a great deal of work still to be done to extrapolate accelerated test results from the laboratory into the field such as the need for new test structures that are designed to better mimic product architectures and improve failure mode visibility.

The technical program included sessions on Negative Bias Temperature Instability, Copper/ Low-k Dielectrics, High-k Gate Dielectrics, Hot Carriers, and Circuits & Memory.

In addition, nine separate tutorials were presented by world-class experts such as Gerry Lucovsky from NC State (defects), Robin Degraeve from IMEC (dielectrics), and Glenn Alers from Novellus (back end).?

The evenings featured four moderated Discussion Groups and two open Poster sessions, all with refreshments provided to stimulate open discussion. A wide range of attendees from commercial semiconductor manufacturers to universities and government organizations were represented.? The workshop schedule included a Wednesday afternoon break to allow participants to take advantage of the unique mountain setting?s recreational opportunities.

All papers presented at the workshop will be published in the Final Report.? Selected papers will be published in a special proceedings issue of IEEE Transactions on Device and Material

IIRW at Stanford Sierra Camp on Fallen Leaf Lake near Lake Tahoe, CA

Reliability.

Next year's workshop will be at the same location from October 16th-19th, 2006.? More details can be found at www.iirw.org.

Hirsch T. Goffman, Medtronic

IIRW 2006 Communications Chair

?

DR. MIN XIE HONORED WITH IEEE FELLOW AWARD

Dr. Thad L.D.Regulinski, FIEEE Chair,
Reliability Society Fellow Evaluation committee

On December 1st, 2005 the IEEE Board of Directors announced it has conferred the Fellow award upon Dr. Min Xie for his outstanding contributions to modeling and analysis of systems and software reliability.

Dr. Xie, who is on the Faculty of the Industrial and Systems Engineering Department of the National University of Singapore, was cited for his numerous publications which include eight books and 150 papers in scholarly journals and conference proceedings. Three of his eight books were cited with distinction: Software Reliability Modeling (World Scientific, 1991); Computing Systems Reliability (Kluwer Academic, 2004), and Weibull Models (Wiley, 2003) .

Dr Xie currently serves as associate editor of our Transactions on Reliability and has served as editor of the International Journal of Reliability, Quality and Safety Engineering since 1995.

Prior to his association with the National University of Singapore, he served as Research and Teaching Fellow at the Linkoping University in Sweden.

IEEE Fellows who are members of the Reliability Society are invited to e-mail their congratulations to Dr. Xie on achieving IEEE Fellow status. His address is: <M.XIE@ieee.org> .

This obituary appeared in the Washington Post on Sunday, September 18, 2005, Page C8.

Alan O. Plait, 1926-2005

Alan O. Plait, 79, a design and reliability engineer who was the retired technical director at ManTech International Corp., died of lymphoma Sept. 14 at his home in Sarasota, Fla. While working for the Admiral Corp. in Chicago in 1954, Mr. Plait designed the first practical modular vertical color television set, at a time when color TVs were just becoming available commercially.

He developed a mathematical basis for the field of reliability studies and helped electronic systems of many types be made to perform more reliably.

Mr. Plait also designed test equipment and military battlefield surveillance systems. He was involved in computer systems design and military equipment programs, including work on medical devices for the Apollo spacecrafts, food packages for astronauts and automated test systems. He worked for Magnavox in Fort Wayne, Ind., in the late 1950s.

Mr. Plait moved to Springfield in 1962 and worked at Melpar Inc. for five years and then for the Computer Sciences Corp. He joined ManTech International Corp. in Fairfax County in 1978 and retired in 1992.

He was born in Chicago and served in the Navy in the Pacific theater during World War II. He taught electronics at the American Television Labs in Chicago in 1947 while attending the Illinois Institute of Technology, graduating with a degree in math in 1951.

Recalled to active duty, he was sent to the naval air station in Jacksonville, Fla., to work in the electronics lab. After his discharge, Mr. Plait worked for the Admiral Corp. and received a second bachelor's degree from the Illinois Institute of Technology in electrical engineering in 1957. He completed a master's degree in systems engineering at Virginia Tech in 1976.

Mr. Plait also taught mathematics and engineering at Illinois Tech, Virginia Tech, George Washington University and the U.S. Department of Agriculture Graduate School. He received the faculty excellence award from the USDA Graduate School in 1986 and the Leo Schubert Award for Excellence in Teaching from the Washington Academy of Sciences in 1989.

He served as president of the Institute of Electronic and Electrical Engineering's Reliability Society and in 1984 was awarded the society's Centennial Medal. The Reliability and Maintainability Symposium named an award in his honor. He was also a fellow of the American Society for Quality, a fellow of the Washington Academy of Sciences and a member of the Naval Cryptographic Veterans Association.

He was a past president of the Kings Park Civic Association in Springfield and was among the founding families of the Congregation Olam Tikvah in Fairfax County. After moving to Sarasota in 1995, Mr. Plait served on the board of directors of

the Sarasota Science and Technology Center and founded its library, which bears his name. He worked as a substitute mathematics teacher for the Sarasota County school system.

Survivors include his wife of 52 years, Evelyn S. Plait of Sarasota; four children,
Sidney R. Plait of Atlanta, Merril E. Plait of Baltimore, Marcia Teece of Baltimore and Philip C. Plait of Rohnert Park, Calif.; seven grandchildren; and one great-grandchild.

Congressional Fellow News
Dr. Norman Schneidewind

I was an IEEE Congressional Fellow, in the office described below for the year 2005, beginning in January and lasting until December. My duties were varied but, in general, I was doing research on technical policy issues, such as homeland security, cyber security, nuclear weapons control, homeland security budgets, airport security; writing speeches for my congressman; participating in hearings; writing questions to be asked of presidential nominees; and acting as the science advisor to the subcommittee.

My Subcommittee is particularly involved in homeland security issues. The current jurisdiction of the Governmental Affairs Committee is indicated below. This committee and the subcommittee, in particular, under the leadership of Senator Daniel K. Akaka (D-HI), have a broad responsibility for national security issues.

Committee on Governmental Affairs
Full Committee and Subcommittee Jurisdictions
for the 109th Congress

I was honored to be a keynote speaker at the International Symposium on Software Reliability Engineering in Chicago, IL, in November 2005 on the topic: An Engineer Discovers the Mysteries of Inside the Beltway as an IEEE Congressional Fellow.

Reliability Society AdCom Meeting January 21, 2006

Introductions
July AdCom mtg minutes accepted
Appointments accepted:□ Sam Keene□ VP Meetings
□ Alan Street Secretary

Comments from Clint Andrews, Div VI Director 2006

- Review strategic issues facing IEEE
- Global growth, declining Society membership, Pubs revenue peaking, Governance challenges, Alternate structures

Review of Financial Report for 2005/2006□ Dick Kowalski

- HQ allocated additional non-member all trans $64k budgeted..distribute FM13
  (end of Feb 06)□□ Approximately positive $100K agains $15K predicted surplus w/o positive investme returns included

□□□□□□ □□..won□t know til March/April 2006.

- 2006 Budget□□ basic budget $30K plus-□new initiatives□ $60K□.creates ~$32K
  $-8K for legacy□ project brings total to -$40K deficit
  □

VP Pubs Report□□□□□□□□□□□ C. Hansen

- Way Kuo□ T-Rel page count, 25-30% OF PAPERS SUBMITTED ARE PUBLISHED
  - 2003-2005 almost 2x volume of papers submitted.
  - Citations are 2x□ as well, but are a concern, though historically (50 years) the□ longevity is the New areas to promote are Nanotechnology and biomedical,

MEMS, Bio publishing..

  - 2006□□ Base l5 %, pdf downloads(usage) 50%, content 35%
  - 2007□□ Base 10%□ pdf download□ 55%, content 30%
  - Suggestion of Special Edition MEMS, more applied perspective, case histories.

- TDMR□□ still free on line□can□t survive as free journal, 2007 paid subscription ?
  □
- In process digitize all pre 1988□ TRANSACTIONS INTO SEARCHABLE□ IEEE format

- T-SM in good financial shape
  Action: M. Abramo□ check with T-SM on EIC succession plan.

- RS Newsletter ..seeking input for 2/2006/ Potential revenue stream ?,

- Business Manager:□□ Scott Abrams□ T-Rel□2005□□ advertising income□ $7.6K
  2006 fully booked at $8K,
  □□ More space requested because advertisers are requesting and willing to pay more
  Action:□ C. Hansen□ Check with IEEE HQ what RS is allowed to do for inside cover space, Xplore fu ad in latest edition

□□□□□□□□□□□□□ What is policy for advertising on Web-site,□ free UMD on web-site ?□ R.Loomis t we are service oriented and should be free to all.□

2

and give D. Hoffman minor editorial license all but one approved

Constitution, ByLaws and Ops Manual to be posted on Web Site
Action: Scott Tomashino

VP Meetings Sam Keene

- Asian Conference, Systems Integration & Reliability IImprovements, Dec 6-8, 2006
- Hanoi, Vietnam Region 10 joint seed ($15,000) from RS and Systems, man & Cybernetics Society

- Next AdCom meeting San Jose, Ca to coincide with IRPS 2006 on Sat. March 25, with March 24 ExCom Mtg scheduled.
- Telecon during interim.

- September Mtg in Knoxville ?? arrive Sept 21st September 22 Tutorials & September 23 AdCom Mtg.

VP Membership Report M. Abramo

- Sr. Member Elevation Guidelines interested folks: Scott Tomashino, Lou Gullo. Bob Stoddard, Bob Loomis

- Student Outreach Initiative

Technical lead: M.Abramo, Program Manager: Jim McLinn

Build Matrix including /Student Topics/Technical Presentation/ Join IEEE Presentation/Student Chapter Advisors/University contacts/Chapter
Scott Abrams Long Island
Ann Miller. IEEE student Chapter Advisors
Way Kuo, Tennesee
Christian Hansen Spokane
Jeff Clark , Boston
Sam Keene, Denver/ Colorado/ ESREF, Lamda mu

New Initiative - Expert Now

Technical Lead: Christian Hansen
$20K CEU s CRE in 26 states Passes Unanimously
Possible Modules:
Software
Six Sigma
FMEA Scott Abrams

New Initiative - Conference partnership in Region 8

Technical lead: Sam Keene

□□□□□□□□□□□□□ Program manager: Alan Street
□□□□□□□□□□□□□ .
□□□□□□□□□□□□□ Alan PLEASE include□ ESREF (11/05)□ Xplore vs Eselvier□ publication of conference proceedings Status update in the Minutes.

New Initiative -□ New Magazine
□□□□□□□□□□□□□ Christian Hansen□□ Technical lead
□□□□□□□□□□□□□ Brett Michael□□ Program manager

New Initiative:□ Systems Council
□□□□□□□□□□□□□ Technical lead: Shuichi
□□□□□□□□□□□□□ Program manager: Lon Chase
□□□□□□□□□□□□□ $5K / year□
□□□□□□□□□□□□□ Motion:□ Increase funding to $7.5K so that liason can travel up to $2.5 K, meet face to face.
□□□□□□□□□□□□□ No ROI for Councils, but there are deliverables this time□. A more fundamental policy needs to be put in place.
□□□□□□□□□□□□□ All in favor,□ except 1 abstain and□ 2 opposed, Christan Hansen & Dennis Hoffman.

New initiative:□ Cyber Security Prototype (Software) legal advisor software DHS□who owns it ??
□□□□□□□□□□□□□ Action:□□ Close the loop; ask IEEE for status/product□things have moved on.□ Jeff Voas

New Initiative Tokyo Meeting/ US Air Force□□ Awareness only□ no vote

New Initiative:□ Asian Reliability Conference Web meeting
□□□□□□□□□□□□□ Technical Lead: Shuichi
□□□□□□□□□□□□□ Program Manager: Alan Street□□ no vote required

Chapter Promotes Membership Award□□ Membership Committee, Lou Gullo, Jim McLinn, Lon Chase, Jeff Clark

Motion:□ To increase Expense Reimbursement:

> AdCom $ 700/AdCom meeting to first meeting attended , cumulative maximum of $1400 for 1st 2 meetings..cumulative maximum of $2100 for 3 meetings.□ Society reimbursement□ limited□ to $2800□

□□□□□□□□□□□□□ ExCom□$1300/mtg Max $5200
□□□□□□□□□□□□□ Motion passed, 1 no vote,□ John Healy, concern over ExCom limits.

RAMS site selection 2007, Shingle Creek Marriott, Orlando, Florida□□□□□□□□□□□□□□

□

□

IEEE Reliability Society Newsletter Submission

from the Boston Chapter

January 2006

Gene Bridgers (Mercury Computer & Results MA),

Joe Dzekevich (Raytheon Company)

Instructors for the fall lecture series at RSA Security Inc., Bedford MA. **Images courtesy of AdCom member G. Kedem (RSA Security Inc)**

Greetings from the Boston Chapter, we are already part way through our 44th season.

In October, we had a total of 8 students in attendance for the Fall Lecture Series on *Simplifying Complex Modeling Using Simulation*. The short course: "using General Purpose System Simulation (GPSS) software to solve complex reliability problems" was a success.

In November, Dr. Jan Krouwer of Krouwer Consulting gave an interesting presentation on "*Combining Fault Trees with FMEA to Reduce Medical Errors*" at EMC Corporation Hopkinton MA. Weather was a factor in attendance, though more than 25 members & guests were able to attend.

In December we held our annual "Past Chairs" Dinner Meeting at RSA Security Inc. We had 38 members & guests in attendance. Peter Blais from Kemet followed dinner with a presentation entitled *Capacitor Design for Reliability.* Peter covered details on recent materials advancements & reliability concerns regarding capacitor

technologies.

We also held local AdCom Officer Elections for 2006, the results are as follows:

Aaron C. DerMarderosian Jr. - Chair & notices (Raytheon Company)

Joseph Dzekevich - Vice-Chair & lecture series (Raytheon Company)

James Fahy - Secretary & web administrator (EMC Corporation)

Don Markuson - Treasurer & awards (Array Inc.)

AdCom Members:

Gene Bridgers - Lecture Series & arrangements

Jeff Clark - Past chair, national AdCom & member at large (Mitre Corp.)

Giora Kedem - Member at large & arrangements (RSA Security Inc.)

Nihar Senapati - Publicity (Avici Systems)

In January, Gene Bridgers of Mercury Computer & Results MA gave a HALT presentation entitled: *"6 DOF Vibration Variability: Great or Ghastly"*. Gene covered the advantages, pitfalls and lessons learned in highly accelerated multi-stimulus environmental testing, used to uncover design & process flaws. We had 37 members & guests in attendance with interesting questions & discussion following the presentation.

Upcoming meetings:

For February, we will hold a joint meeting with the ESD Association at RSA Security Inc. Dangelmayer Associates will give a presentation entitled: *"Impact of the ESD Trend Toward Ultra-sensitive Components"*. Registration is open, we already have 27 attendees signed up for this meeting.

We will follow up with a Spring lecture series in March (15th, 22nd & 29th) entitled: *"Using QuART Software to Solve Common Reliability Problems"*. Quanterion Automated Reliability Toolkit (QuART) is an available Engineering software tool. Seymour Morris from Quanterion (former program manager for MIL-STD-217) will lead discussions the 1st night with Joe & Gene providing instruction the 2nd & 3rd nights. Planning & publicity is nearly complete.

The Boston Reliability Chapter advertises upcoming meetings, registers attendees & uploads past presentations on our IEEE hosted web-site. The URL is http://www.ieee.org/bostonrel.

Regards,

Aaron C. DerMarderosian Jr.

Chair, Boston Chapter

Cleveland Chapter ????? ????????????????????? ????????????????????? ????????? Fall 2005

The Cleveland Chapter had two meetings in this period.

PAST MEETINGS

The September meeting was the Fall Steak Roast. The steaks and fish were very good this year. The Picnic Grounds are a great place to have the roast. All who where able to make it enjoyed the fun, games, and conversation. Having a roast twice a year is still a well-supported activity for the Club.

For the November meeting, Anne Power, Assistant Records Manager and History Officer, discussed "The GRC History Office Activities." Many significant changes are being made at the Lab. The History Office keeps the records and prepares documents to describe the great work that is being done on the Lab. An example she explained was the 60 Megawatt Reactor that is being dismantled at PBRC. A DVD was prepared to describe this history. A copy was given to each member. The members enjoyed the meeting and learned some important things that can be done to help the History Office.

CHAPTER ACTIVITIES
????
We are supporting ?07 RAMS on the Management Committee, with papers, tutorials, and session suggestions. The Chapter Staff are all working to make it a big success.

We have put together a plan for AUTOTESTCON 2010 in Cleveland. The plan is to expand the Instrument Reps show at Landerhaven Country Club. The conference will include exhibits, technical sessions, tutorials, poster sessions, and awards for the best paper and poster. Support for this activity has been obtained from the Cleveland Section. Support is needed from IMS, AES, and IRIS. The staff is ready, willing, and able to add this activity as a major service to our members..

?The Assurance Technology Symposium and Risk Management Conference will be held at the Ohio Aerospace Institute in June and September 2006. There will be presentations, exhibits, training, and splinter meetings in the three and one half day activities. Awards for the best presentation is given.? These activities provide the Safety and Mission Assurance (SMA) community and Project personnel with a unique opportunity for interchange and interaction on innovative assurance technologies and tools. It promotes dialog and cooperation with the Projects, Centers, and the SMA community.????

Overall, here in Cleveland we are having fun, staying active, and serving the needs of our members.

Regards,

Vince Lalli, Chair???

Dallas IEEE Reliability Society

Lon Chase, Chapter Chair

November 2005 Meeting

Title: **"Designing for Health; An Integrated Methodology for Diagnostics/Prognostics"**
Speaker: Raymond Beshears, Senior Systems Engineer, Raytheon Co.

Program Summary:
A critical element of system readiness is the effectiveness of integrated diagnostics and prognostics. An integrated diagnostics/prognostics is achieved through a systems engineering closed loop process from start to finish.

This presentation illustrates how an integrated health management system (HMS) methodology, connects functionality, failure modes and diagnostics/prognostics under one umbrella providing a conduit for tight traceability from requirements through design, analysis, integration, verification and validation, factory testing, and fielding while encouraging maturation through data collection. This framework minimizes errors between diagnostic/prognostic analyses and actual performance, maximizes test verticality, and paves the way for a lower risk fielded product. This presentation describes how this framework creates a seamless closed loop diagnostic/prognostic process that fits into the new DoD 5000.2 Instruction: Integrated Defense Acquisition, Technology and Logistics Life Cycle Management Framework.

The paper that goes along with this presentation received the "Best Paper for Potential Improvement to Warfighter Support" which was awarded by the Office of the Secretary of Defense ATS Management Board at the Autotestcon 2005 Conference.

Speaker:
Raymond Beshears graduated with a B.S. Degree in Electrical Engineering from Texas Tech University in May 1999. He is a Senior Systems Engineer with 6 years of Raytheon experience specializing in Health Management Systems (HMS) and Maintainability/Testability (M/T). He has worked on Reliability, Maintainability and Testability engineering efforts on programs such as Commanders Independent Viewer (CIV) and the Mult-Spectral Targeting System (MTS). He is now leading the HMS and Maintainability/Testability effort on the MMA Radar Subsystem.

****

January 2006 Meeting

Title: **Reliability in Biomedical Instrumentation**
Speaker: Dr. H. F. Tibbals, UT Southwestern Medical Center at Dallas

Program Summary: This presentation overviews work in progress and some completed projects for developing and testing biomedical instrumentation at the Bioinstrumentation Resource Center of UT Southwestern Medical Center at Dallas. Dr. Tibbals will discuss aspects of reliability for medical

devices and biomedical research instrumentation, including FDA regulations, safety monitoring, and standards organizations involved in ensuring safety and reliability for medical devices.
Projects include electrophysiology systems for stimulation and response studies in animals and human subjects, electromagnetic stimulation for enhancement of bone growth and healing, and special waveforms for cardiac pacemaker stimulation. Also discussed will be a recently completed study done in collaboration with Dr. Austin Cunningham of UTD for reliability of gas sensor devices as part of spaceflight qualification for use by NASA as life support monitors for the International Space Station and Spacelab.

Speaker:  H. F. Tibbals is Director, Bioinstrumentation Resource Center, University of Texas Southwestern Medical Center in Dallas, Texas. The Bioinstrumentation center provides engineering support to researchers and clinicians. As one of the basic research service organizations in the University, the Center provides design and analysis consulting in mechanical, electronic, and systems engineering. Its priorities are to provide a customer service oriented support organization with the capabilities to meet UTSouthwestern's world class requirements.

Tibbals co-founded Biodigital Technologies in 1989, where he served for eight years as President. During that time he also served on the Board of Martingale Research Corporation, and developed medical and analytical devices and instruments including the Kodak Cardiology Imaging Systems the Teledyne Chemical and Biological Mass Spectrometer with Bruker-Franzen, and the Paradigm Solo mass spectrometry based anesthesiology system. He was Principal Design Engineer for Systems Technologies for Mostek from 1983 to 1985 where he led development and application design support for VME systems. He served as a Senior Systems Scientist for Rockwell International leading packet radio, digital facsimile and data compression projects and as Product Line Manager for the Transputer and digital signal processing designs at Inmos.

He received his BS degree in Chemistry and Mathematics from Baylor University, his PhD in Chemical Physics from the University of Houston, and received a SRC Postdoctoral Fellowship in silicon physical chemistry at the University of Leicester. He has taught at Glasgow University, Durham University, the Open University, the University of North Texas, and the University of Texas at Dallas' School of Human Development. From 1985 to 1988 he co-organized a series of conferences on Networks in Brain and Computer Architecture and has published papers on photosynthesis, signal processing, mass spectrometry, and electrophysiology. He serves on NIH review panels on medical devices and nanotechnology. He is the inventor of two patents and signatory on the FDA 510K for two approved medical devices. Tibbals can be reached at tibbals@utsw.swmed.edu

Denver Chapter
by Sam Keene

Denver held a software test automation meeting in conjunction with the Software Quality Assurance of Denver Group (SQAD) and had a round table on test automation.

Asian Reliability Conference 2005

Reported by Kazuyuki Suzuki, Chair, Japan Chapter and Shuichi Fukuda, VP, Tech Ops

Asian Reliability Conference 2005 (ARC 2005) was held on November, 2005 at the University of Electro-Communications, Tokyo, Japan, hosted and sponsored by IEEE Reliability Society Japan Chapter and co-sponsored by IEEE Reliability Society with technical sponsorship from IEICE (Institute of Electronics, Information and Communication Engineers) Engineering Science Society, Reliability Engineering Association of Japan, The Japanese Society of Quality Control, Information Processing Society of Japan and Human Interface Society.

ARC2005 is one of the New Initiatives which was proposed at the January AdCom, 2005 to expand Reliability Society activities throughout Asia where reliability is becoming more and more important and to meet these demands as a series to be held every year in Asia.

Although preparation time was very much short, the conference could be held with a full support from the University of Electro-Communications(UEC), which is the only national university with faculty of electro-communications and with graduate schools featuring the domain.

The President Takashi Masuda and Vice President Tadamasa Kimura, UEC gladly accepted the role of chair and vice chair of the Organizing Committee. And with the full support from the members of Organizing Committee, Prof. Yoshinori Iizuka, University of Tokyo, Prof. Hideo Nakamura, Nihon University, Prof. Shigeru Yanagi, National Defense Academy, Prof. Akihiko Masuda, Teikyo University, Prof..Toshiyuki Inagaki, Tsukuba University, Prof. Takehisa Hohda, Kyoto University, Prof.Koichi Suyama, Tokyo University of Marine Science and Technology, Prof. Tadashi Dohi, Hiroshima University, Prof.Shuichi Fukuda, Tokyo Metropolitan Institute of Technology, Prof. Kazuyuki Suzuki, University of Electro-Communication, the preparation was carried out and the conference could be held.

The Executive Committee was chaired by Prof. Shuichi Fukuda, TMIT with Prof. Kenji Tanaka, UEC, Prof.Makoto Ito, Tsukuba University, Prof.Tetsushi Yuge, National Defense Academy, Prof.Wataru Yamamoto, UEC, Prof.Yasuharu Nishi, UEC and Prof. Kazuyuki Suzuki, UEC as members.

The conference was divided into morning and afternoon portions. The morning portion from 9:00 to 12:30 was composed of the three following parallel sessions.

<u>Session A: Principles of Reliability</u>

Jeffrey Voas , ⁄In today's world, where does "reliability" fit?⁄
John Viega ,⁄Software Security: why it's important, and what to do about it⁄
Akihiko Masuda , ⁄A New Approach on Service Reliability - Its Concepts and Analytical Tools ⁄

Session B: Reliability for Human and Complex Systems

Bret Michael ,⁄Environment Behavior Models for Automation of Testing and Assessment of System Safety ⁄
Toshiyuki Inagaki , ⁄Risk-based design of human interactions with smart machines⁄
Kazuyuki Suzuki , ⁄Optimal Decision Procedure for Safety Monitoring Systems⁄

Session C: Reliability Modeling

Richard Doyle ,⁄MEMS Reliability - Mechanical Stress Analysis⁄
Sam Keene , ⁄Reliability prediction technology and perspective⁄
Koichi Suyama , ⁄Probabilistic safety assessment of control logic⁄

The afternoon portion was the following four parallel tutorial sessions.

Tutorial A
Jeffrey Voas, ⁄Software fault injection and its relationship to software testing⁄

-
Tutorial B
Sam Keene, ⁄Six Sigma contributions to reliability⁄

-
Tutorial C
Richard Doyle, ⁄Thermal Analysis of Electronic Systems and Parts⁄

-
Tutorial D
Bret Michael, ⁄Software-Based Safety Kernels for Hybrid Systems⁄
John Viega, ⁄Common Misconceptions about Cryptography⁄

In the evening Reception was held from 6pm to 7:30pm.

The number of attendees was 97. Although usually conferences held in Japan are filled with silent audiences, this one is very much exceptional. There were a great number of discussion and the interaction between the speakers and the attendees were so much that there were many voices for thanking that such a conference was held in Japan and that the interaction and discussion was very much fruitful, informative and satisfying and all attendees told the organizing and executive organizing members that they hope this series of conference will be established and continued.

Prof. Enrico Zio
Politecnico di Milano

WORKSHOP ON DYNAMIC RELIABILITY: RESULTS AND LESSONS LEARNED ON A BENCHMARK

In the years 2004-2005, the *Italian Association of environmental, safety and reliability analysts, 3ASI (Associazione degli Analisti dell'Ambiente, dell'Affidabilita' e della Sicurezza Industriale)*, the leading national association in the field of safety and reliability, has launched a benchmark exercise on the theme of dynamic reliability, with the aim of testing some emerging methods.

Dynamic reliability aims at broadening the classical event tree/ fault tree methodology so as to account for the mutual interactions between the hardware components of a plant and the physical evolution of its process variables. The dynamical aspects concern the ordering and timing of events in the accident propagation, the dependence of transition rates and failure criteria on the process variables values, the human operator and control actions. Obviously, a dynamic approach to reliability analysis would not bear any significant added value to the analysis of systems undergoing slow accidental transients for which the control variables do not vary in such a way to affect the component transition rates and/or to demand the intervention of the control.

Dynamic reliability methods are based on a powerful mathematical framework capable of integrating the interactions between the components and the environment in which they function. These methods perform a more realistic modeling of the system and hence improve the quality and accuracy of risk assessment studies. A formal approach to incorporating the dynamic behavior of systems in risk analysis was formulated under the name Probabilistic Dynamics [Devooght and Smidts, 1992]. Several methods for tackling the solution to the dynamic reliability problem have been formulated over the past ten years [Cojazzi et al., 1992; Aldemir et al., 1994; Siu, 1994; Izquierdo et al., 1994; Labeau, 1996; Marseguerra and Zio, 1996]. Among these, Monte Carlo methods have demonstrated to be particularly efficient in taking up the numerical burden of such analysis, while allowing for flexibility in the assumptions and for a thorough uncertainty and sensitivity analysis [Marseguerra and Zio, 1996; Labeau and Zio, 1998].

For realistic systems, a dynamic approach to reliability analysis is likely to require a significant increase in the computational efforts, due to the need of integrating the dynamic evolution with its characteristic times. The fast increase in computing power has rendered, and will continue to render, more and more feasible the incorporation of dynamics in the safety and reliability models of complex engineering systems.

Description of the benchmark

Nominal Case Study

The system is composed by a tank containing some fluid, two pumps (P1 and P2) to fill the tank, a valve (V) to remove fluid from the tank, and a controller monitoring the fluid level (H) and acting on P1, P2 and V [Marseguerra and Zio, 1996].

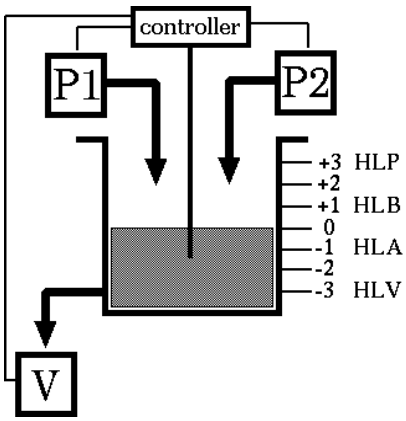

Initially H is equal to 0, with P1 and V in state ON, and P2 in state OFF; since both pumps and the valve have the same fluid level variation rate, while the initial configuration holds, the fluid level does not change. The cause of a variation of H is the occurrence of a failure involving P1, P2 or V; a failure consists of turning to the states stuck ON or stuck OFF. The failure probability obeys to the negative exponential distribution ruled by state independent failure rates.

If H reaches the level denoted as HLB (+1) there is the risk of the fluid overflowing; this event occurs when H exceeds the level denoted as HLP (+3). To avoid this undesired situation, the controller orders both pumps to switch OFF and the valve to switch ON, with the aim of decreasing H. If a component is stuck, it does not obey to the controller order and maintains its current state.

The other undesired situation is the tank dryout; this happens when H is below HLV (-3); to avoid the dryout, when H reaches HLA, the controller orders both pumps to switch ON and the valve to switch OFF, with the aim of increasing H.

Failure of the system occurs when either the dry out or the overflow occurs.

Modified Case Studies

Some variations to the nominal case study have been considered:

- **the case with state dependent failure rates:** the failure rates of P1, P2 and V, change their value with respect to the current state of the component (ON or OFF);
- **the case with a possible failure on demand by the controller:** in this case, there is a certain probability that the controller may not act on the components state, though it is necessary due to the current fluid level (H ≤ HLA or H ≥ HLB);
- **the case with repairable components:** the stuck components can be repaired; the time to repair a component obeys to the negative exponential distribution ruled by the component repair rate;
- **the case with temperature dependent failure rates:** the component failure rates depend on the current temperature of the fluid in the tank; the fluid injected by the pumps has a constant temperature, while a heating source increases the temperature of the fluid inside the tank. A third failure condition is considered: the fluid temperature reaches a certain maximum temperature.

Workshop

A workshop presenting the results of the benchmark was organized jointly by 3ASI and the Italian Chapter of the IEEE Reliability society. The host of the Workshop was the Politecnico di Milano, Department of Nuclear Engineering. A presentation of dynamic reliability and its general framework was given by Prof. Enrico Zio. Then, two contributions were given to report the results obtained with two different techniques:

A. Bobbio, D. Codetta Raiteri, Solution of dynamic reliability problems via ordinary and fluid stochastic Petri nets, Turin University

The reliability evaluation of the benchmark has been preformed by modeling the system behaviour as a *Generalized Stochastic Petri Nets* (**GSPN**) [Ajmone-Marsan et al., 1995], a particular evolution of Petri Nets where transitions firing can be immediate or randomly delayed.

Since GSPNs are not suitable to deal with continuous variables, the fluid level has been discretized to several intermediate values, while its variations have been modelled as timed transitions.

The analytical approach has been applied to the GSPN model of the benchmark; the obtained results [Bobbio and Codetta, 2005] have been validated successfully, by comparison with those reported in [Marseguerra and Zio, 1999] obtained by Monte Carlo simulation, and with those obtained by modeling and simulating the system as a *Fluid Stochastic Petri Net* (**FSPN**) [Gribaudo et al., 1999], a rather recent evolution of GSPN with the aim of dealing with both discrete and continuous variables.

So, we showed how GSPN modeling combined with continuous variables discretization, can be a suitable method to evaluate the reliability of hybrid and/or dynamic systems.

J. Beati, M. Caira, Dynamic Event Trees, "La Sapienza" University, Rome

The University of Rome has carried out the benchmark using a Dynamic Event Tree methodology. This methodology takes into account the effect of aging, maintenance and accident time transient on the component reliability. These effects are considered modifying the term of the failure rate in the exponential relation of the reliability and calculating the failure probability in the different steps of the transient.

The methodology shows good results by comparison with the analytical solution of the benchmark made with Monte Carlo simulation and also with the solution of the Generalized Stochastic Petri Nets of the Torino University. Only for slow transient with time interval comparable to the maintenance interval the methodology shows some differences in the results. In any case this methodology appears very easy and fast to apply in many cases during the first row analysis of the accident in order to take into account the dynamics of the transient.

The meeting was concluded by a participated discussion on the applicability of the methods.

The technical reports regarding the two presentations are posted on the 3ASI web site (www.3asi.it), in English language.

References

[Ajmone-Marsan et al., 1995] M. Ajmone-Marsan, G. Balbo, G. Conte, S. Donatelli, G. Franceschinis. *Modeling with Generalized Stochastic Petri Nets.* Wiley Series on Parallel Computing, 1995.

[Aldemir et al., 1994] Aldemir T., Siu N., Mosleh A., Cacciabue P.C., Goktepe B.G., Eds.: Reliability and Safety Assessment of Dynamic Process System NATO-ASI Series F, Vol. 120 Springer-Verlag, Berlin, 1994.

[Bobbio and Codetta, 2005] A. Bobbio, D. Codetta Raiteri. Solving Dynamic Reliability Problems by means of Ordinary and Fluid Stochastic Petri Nets. Proceedings of the European Safety and Reliability Conference 2005 *(to appear)*.

[Cojazzi, et al. 1992] Cojazzi G., Izquierdo J.M., Melendez E. and Sanchez-Perea M., The Reliability and Safety Assessment of Protection Systems by the Use of Dynamic Event Trees (DET). The DYLAM-TRETA package. Proc. XVIII annual meeting Spanish Nuclear Society. October 28-30, 1992.

[Devooght and Smidts, 1992] Devooght J., Smidts C., Probabilistic Reactor Dynamics I. The Theory of Continuous Event Trees, Nucl. Sci. and Eng. 111, 3, pp. 229-240, 1992.

[Gribaudo et al., 1999] M. Gribaudo, M. Sereno, A. Bobbio. Fluid Stochastic Petri Nets: An Extended Formalism to Include non-Markovian Models. *8-th International Conference on Petri Nets and Performance Models, IEEE Computer Society Press:* 74-81, 1999.

[Izquierdo, et al. 1994] Izquierdo J.M., Hortal J., Sanchez-Perea M. and. Melendez E, Automatic Generation of dynamic Event Trees: A Tool for Integrated Safety Assessment (ISA), Reliability and Safety Assessment of Dynamic Process System NATO-ASI Series F, Vol. 120 Springer-Verlag, Berlin, 1994.

[Labeau and Zio, 1998] P. E. Labeau, E. Zio, "*The Cell-to-Boundary Method in the Frame of Memorization-Based Monte Carlo Algorithms. A New Computational Improvement in Dynamic Reliability*", Mathematics and Computers in Simulation, Vol. 47, No. 2-5, 1998, 329-347.

[Labeau, 1996] Labeau, P.E., Probabilistic Dynamics: Estimation of Generalized Unreliability Through Efficient Monte Carlo Simulation, Annals of Nuclear Energy, Vol. 23, No. 17, pp. 1355-1369, 1996.

[Marseguerra and Zio, 1996] Marseguerra M. and Zio E., Monte Carlo approach to PSA for dynamic process systems, Reliab. Eng. & System Safety, vol. 52, pp. 227-241, 1996.

[Siu, 1994] Siu N., Risk Assessment for Dynamic Systems: An Overview, Reliab. Eng. & System Safety, vol. 43, pp. 43-74.

Report by Singapore REL/CPMT/ED Chapter

1. Technical talk

· 30 November 2005, Prof. Christian Enz, Swiss Center for Electronics and Microtechnology (CSEM) and Swiss Federal Institute of Technology (EPFL), Switzerland, "Compact Modeling of Thermal Noise in the MOS Transistor Using the EKV Model".

· 9 Jan 2006, Prof. Edmund G. Seebauer, Department of Chemical & Biomolecular Engineering, University of Illinois at Urbana-Champaign, USA, "New Methods for Defect Engineering in Semiconductors".

· 9 Jan 2006, Prof. Vijay K. Arora, Wilkes University, USA, "Failure of Ohm's Law Its Implications on Circuit Design".

2. Conferences

· 13th IPFA (IPFA'06) will be held from 3rd to 7th July 2006 at Meritus Mandarin, Singapore. The second call for papers has been announced recently.

· The 7th Electronics Packaging Technology Conference (EPTC 2005) was successfully organized on 7th-9th December at the Grand Copthorne Waterfront Singapore. The conference was well attended over the 3 days. A total of 87 delegates participated in the short courses on 7th December 2005. This is by far the best turn-out for any EPTC organized short course. The conference on 8th-9th December was attended by a total of 265 delegates from over some 19 countries. EPTC 2005 was organized by IEEE Reliability/CPMT/ED Singapore Chapter. In the plenary session, Dr Robert Darveaux from Amkor Technology discussed the "Current Trends and Critical Issues in Flip Chip Packaging" and Dr Chiang Shiuh-Kao from Prismark, to gave an insight on "The Global Packaging Business and Technology". An invited talk "CPMT and EPTC: A study in Symbiosis" was delivered by the CPMT representatives of Dr William Chen, Prof Klaus-Jürgen Wolter and Dr Ricky Lee during the conference day 1 luncheon.

3. Others

· Dr. Alastair Trigg represented the IPFA Board and the Chapter to attend the ESREF'05 meeting, Oct 2005, France.

· Dr. Radhakrisnan represented the IPFA Board and the Chapter to attend the ISTFA'05 meeting, Nov 2005, USA.

· The Chapter donated a book prize of S$2,500 to the School of Mechanical & Aerospace Engineering, Nanyang Technological University. This book prize entitled "IEEE Reliability/CPMT/ED Singapore Chapter Book Prize" is awarded to the student who has distinguished himself in the Electronics Manufacturing and Packaging Technology final year specialization in the final year of the Engineering (Mechanical) course of next 5 years.

· On 16 Dec 2005, the Chapter hosted a farewell and appreciation function for Dr. Soon-Huat Ong, who has just retired in July 2005. Dr. Ong is a senior member of IEEE and has made significant contributions towards the activities of the IEEE Singapore REL/CPMT/ED Chapter, the International Physical and Failure Analysis Symposium (IPFA) and the Electronics Packaging Technology Conference (EPTC) over the past 19 years. Dr. Ong was an instrumental person in the development of IC failure analysis and reliability, and packaging technology activities in Singapore for the past 20 years.

Dr. Ong and some of the Executive members of Chapter and IPFA at the farewell function.

By KL PEY

Chair, Singapore REL/CPMT/ED Chapter

IEEE Reliability Society ⬩ Twin Cities

The Twin Cities IEEE Reliability Society meets once a month between September and May to discuss reliability topics of interest. The IEEE cooperates with the local chapters of the American Society for Quality (ASQ) and the Institute of Environment and Stress Tests (IEST). Over the past 3 months these groups have met on the following topics:

October 18 th, 2005 ⬩ Joint Meeting with local chapter of the System Safety Society. Robert Hunter spoke upon ⬩Writing Good Safety Requirements⬩ A total of 27 people attended.

November 15 th ⬩ Mark Porter of MicroRel spoke upon ⬩IC Reliability⬩ at a Webinar at Medtronics in Fridley Minnesota. Forty people attended in person with 10 additional over the net.

January 17 th, 2006 ⬩ Unisys hosted a meeting on the topic of ⬩Understanding DRAM based reliability⬩ by Brad Cattadoris, component engineer. Fifteen people attended.

February 21 st ⬩ Paul Prew of EcoLab will speak upon ⬩Reliability estimation for zero failure tests⬩

Submitted by James McLinn - Minnesota

Annual Technical Report

Reported by Shuichi Fukuda

Present Technical Committees are as follows (links to committee reports are provided).

Name of Committee	Chair
- Automotive Systems	Guangbin Yang
- Standards and Definition	Tom Brogan
- Software Reliability	Sam Keene
- Warranty	Judith Koslov
- System Safety	Takeshisa Kohda
- Industrial Systems	Kenji Yajima
- Information Technology and Communications	John Healy
- Aerospace and Defense Systems	Lon Chase
	(Vice chair: Scott Tamashiro)
- Mechanical Reliability	Dick Doyle
- Assurance	Bret Michael

Two new committees will be formed.

- MEMS and Microsystems	Danielle Tanner
- Reliability Design	Dev Raheja

Reports from each committee are provided in the links.

Automotive Systems Technology

Guangbin Yang

Chair of the Automotive Systems Technology Reliability

In the automotive marketplace, the past year was characterized by the fierce competition for market chares due to the global headache of high fuel price. To survive and grow in such a competitive business environment, manufacturers of automotive systems have to produce better-fuel-economy vehicles at higher reliability, with more features, and at lower costs. The unprecedented challenges are forcing the manufacturers to develop and utilize more effective and efficient technologies.

Many new technologies, which are aimed at improving fuel efficiency, are subject to premature failures. It is reported that most field failures can find root in inadequate design. Eliminating design mistakes and increasing design robustness are the most important and effective approaches to minimizing field failures. A powerful tool for improving robustness is the Design for Six Sigma (DFSS). DFSS is a structured design process, which systematically institutes the existing design tools such as the robust design, design of experiment, probabilistic design, and CAE modeling. The process consists of four steps: define system metrics critical to customer satisfaction, characterize the system by decomposing the system metrics into engineering measurable metrics, optimize product / process design, and verify the effectiveness of the results. Because DFSS establishes reliability and robustness into products in the upfront of the design phase, the technique is capable of reducing design costs, accelerating design time, minimizing field failures and warranty costs. Due to these covetous benefits, DFSS has been assessed, implemented and advanced by the automotive industry.

The emerging hybrid vehicles impose difficult challenges to the reliability engineering. Many subsystems and components of the vehicles are warranted for 15 years and 150000 miles, in contrast to 3 years and 36000 miles of pure gas vehicles. The lengthy period certainly raises warranty costs to manufacturers. To make the products profitable, the manufacturers must improve the reliability by extending the design life and using more effective reliability techniques. Testing of the high reliability components and subsystems is also a challenge in terms of time and cost, especially in today's business climate. Accelerated life tests and degradation tests must be used. There are some new test methods that emerged lately. For example, the accelerated life tests at higher usage rates allows a product, whose life is measured by usage, e.g., mileage, to be tested at elevated stress levels as well as at higher usage rates. The lifetime at the use condition is obtained by extrapolating the test data. Another example of the new test methods is the accelerated degradation test using tightened thresholds. The approach tests products at

higher stress levels, and at the same time, tightens the critical values of the performance characteristics such that the products can fail sooner. On the other hand, the extended warranty coverage challenges the current warranty analysis tools, which may be inefficient and even invalidated when applied to these products. There is a strong need to develop new techniques for the warranty analysis.

Automotive systems are usually expensive; statistical test at large sample size is unaffordable. Motivated by the difficulty, experts have developed various methodologies, including, for example, bogey testing based on physical characteristics. The approach reduces the sample size by integrating the physical information into the test data analysis.

**** The Committee on Automotive Systems has successfully completed a number of tasks in the past year. The tasks include chairing sessions for ISSAT and SAE conferences, presenting technical papers at RAMS and other symposia, publishing papers in technical journals such as the IEEE Transactions on Reliability, reviewing technical papers for journals and international conferences and technical standards for societies, and many others.

RELIABILITY SOCIETY STANDARDS & DEFINITIONS COMMITTEE YEAR 2005 REPORT

Yvonne Lord

Tom Brogan

January 22, 2006

Topic Areas

- P1633: Recommended Practice for Software Reliability
- P1624: Guide for Organizational Reliability Capability Definition
- P1413: IEEE Standard Framework for Reliability Prediction of Electronic Products
- New financial reporting requirements for Standards Developing groups

P1633 Recommended Practice for Software Reliability

- Original PAR for a "Recommended Practice" Approved by IEEE Standards Board on Feb 13, 2003
- Between February 2003 and June 2004 significant discussion between WG members on changing document to a "Standard"
- In December 2004 draft document as a "Standard" circulated for comments with responses due by February 1,2005. Committee of Dr. Allen Nikora, Dave Franklin (RS), Dennis Lawrence & Norm Schneidewind were to resolve comments
- As of 1/5/06 technical work is complete and Allen Nikora is completing formatting arrangements with IEEE SA after which document will go to Ballot (PAR has not been revised to Standard)

P1624: Guide for Organizational Reliability Capability Definition

- Original PAR was approved in December, 2002 as a guide for development by SCC 37
- In July 2005, after the dissolution of the SCC, the development process is continuing under the auspices of the reliability society
- The last meeting of the workgroup was held on October 2005 that reviewed the working draft
- An updated version of the standard based on that review is ready to be sent to the rest of the workgroup for discussion by the end of January 2006.
- Based on the level of feedback obtained from the workgroup, a decision will be made on whether to seek an extension for the PAR

P1413: IEEE Standard Framework for Reliability Prediction of Electronic Products

- An one year extension was obtained form the standards board to keep 1413 active beyond its scheduled cancellation in 2004
- PAR for the revision was approved on August 2005
- The main focus of the revision is to ensure that the knowledge developed regarding the use and application of 1413 in the field and during the development of the guidebook 1413.1 is appropriately reflected in the revised standard
- It is expected that PAR revision will be proposed later this year because there are expected to be changes in the title and scope during the development

FINANCIAL REPORTING REQUIREMENTS FOR STANDARDS DEVELOPING GROUPS

•Recent legislation requiring stricter controls in fiscal accounting has made is necessary for the IEEE Audit Committee to implement a new accounting and reporting policy.

•The policy is being implemented IEEE-wide and includes all Technical Activity and Regional Activity volunteer groups (sections and conferences), as well as all standards developing sponsors and working groups operating under the IEEE-SA standards oversight.

•Effective immediately, the IEEE-SA will be requiring an L50-S form submitted annually from all IEEE-SA standards developing sponsors and working groups. The fiscal year 2006 L50-S will be due March 2007.

IEEE Reliability Society Technical Committee Annual Reports

<u>Software Reliability Committee</u>

(1) What is the objective of your committee?

To promote and teach best practices of software reliability, and be a focal point for answering software reliability questions put to the IEEE reliability society.►► This committee also participates in the management of the International Software Reliability Engineering Symposium (ISSRE).

(2) Who are the members with their affiliation?

Dr. Samuel Keene►►► Keene and Associates
Professor Norman Scheidewind,► US Congressional Fellow
Dr Alan Nikora, JPL
Dr Bill Everett, Los Alamos Laboratories

(3) What did you do on your committee?

Dr Samuel Keene, Software Reliability Committee Chair

(4) What is going on in your committee activity area?
►
IEEE 1633A, AIAA R-013A, Software Reliability Standard is being rewritten:
The technical work is complete. The standard is awaiting completion of edit according to IEEE format rules. The next step is to go to ballot. All committee members

IEEE 982.1 "Standard Dictionary of Measures of the Software Aspects of Dependability►:
Approved by the IEEE Standards Board ► Schneidewind and Nikora

Presented Software reliability lecture at the ARC meetings in Tokyo

Professor Norman Schneidewind served as a Congressional Fellow for 2005

Dr Sam Keene continues to refine and present his process-based software reliability model.

All of the committee members participated in re-writing the ISSRE Charter and selecting a new steering committee.

Chaired IEEE CS TCSE Committee on Software Reliability Engineering (SRE) - Everett

Bill Everett served as ISSRE2005 Pubs Chair, mentored General Chair, also served on Program and Industry Practices Committees (reviewed a dozen papers for the ISSRE conference).

Bill Everett served on ISSRE2005 panel "Everything you wanted to know about SRE but were afraid to ask".

Bill Everett Chaired 3 sessions at ISSRE2005.

Professor Min Xie, who works in software reliability community, was recognized as an IEEE Fellow in the 2005 election.

<u>Six Sigma</u>

(1) **What is the objective of your committee?**
To promote and teach best practices of Six Sigma engineering, and be a focal point for answering Six Sigma questions put to the IEEE reliability society. (2) Who are the members with their affiliation?

(2) Who are the members with their affiliation?

Dr. Samuel Keene Keene and Associates
Robert Stoddard Carnegie Mellon University

(3) What did you do on your committee?
Dr Samuel Keene, Six Sigma Committee Chair

(4) What is going on in your committee activity area?

Dr Keene puts on the annual RAMS tutorial on Six Sigma
Dr Keene has been an invited speaker at workshops and presentations in the Denver CO area
Dr Keene put on lectures and tutorials at Asia Reliability Conference in Tokyo, November 2005
Dr Keene is helping to organize the joint conference with the SMC society on Systems Integration and Reliability Improvement in Hanoi VN for December 6-8, 2006

Industrial Systems committee Report
Kenji Yajima

The objectives of Industrial Systems committee are

(1) First to make reliability issues on site of industrial systems clear
(2) Second, survey of concept and methodology for solving these reliability issues especially useful for real system operation.
(3) Finally, to output result of survey and discussion to newsletter and other documents

- Last year, we paid much attention to reliable culture, and focused on organizational issues and risk management issues in industrial systems from viewpoint of systems engineering
- Members of our committee attended some symposiums and conferences of reliability and system safety.
- Through these activities, we feel that safety of industrial system on site is not achieved only by technology, but also by human engineering sociology and so forth. So, we set focus on safety science and safety culture.
- Safety science seem to consist of a variety of heterogeneous fields such as, safety education study, risk management, system safety management, human behavior science, system safety engineering, and safety information system study and interdisciplinary sturdy among those fields.
- Also, Safety science should be studied in connection with safety support fields such as psychology, decision-making theory, and human engineering.
- We began to survey organization theory and management theory in sociology and management science, and organizational behavior theory and organizational psychology in industrial field.
- From our survey , we believe that those sturdy and interdisciplinary sturdy among them are not enough for safety of industrial systems.
- In constructing safety science, we find several Approach^{e} such as (1) Systems approach to safety issues, (2) Approach from the viewpoint of human behavior and so forth.

But, we think that right now it is difficult to create concept and theory of safety culture in general,
So, we should try to study the concept through the activity of failure analysis of real accident such as railway accident at Kansai area in Japan..
For our survey, we want to establish connection with other association such as Japanese chemical industry association. The result of our survey is shown in Newsletter

For this year, we will continue survey of safety culture,.And also we survey trend of safety of industrial systems in Internet era and a knowledge architecture of safety in interdisciplinary fields and solves real safety issues at systems, products and service in industrial systems.The result of our activity will output to committee report and newsletter

Aerospace and Defense Committee

Lon Chase (l.chase@ieee.org)

January 22, 2006

What is the objective of your committee?

- Mission Statement

  The Aerospace and Defense Technical Operations committee's mission is to monitor, assess, manage and report ongoing aerospace and defense industry reliability activities and future direction. As such, this committee will track and report various thrusts and technologies, conferences and symposiums, major publications, activity and issues important to reliability in this industry.

Who are the members?

- Current Identified Members
  - Dennis Hoffman
  - Dave Franklin
  - Scott Tamashiro
  - Lou Gullo
  - Tom Brogan?
  - Others TBD
- 2006 efforts will include participant identification

What is going on in your committee activity area?

- Desired Inputs
  - Technologies and thrusts
  - Issues
  - Publications/Conferences
  - Opportunities for international collaboration
  - Other useful information to communicate
- Future activities
  - Firm members and participants in the committee
  - Identify areas of involvement
  - Identify opportunities for communication
  - Gather information for the ATR

MEMS and Microsystem Technical Operations Committee

Chair: Danelle M. Tanner

The purpose of the MEMS and Microsystem Committee is to provide a reliability focus to this new multi-disciplinary field where some products have overtaken the market (accelerometers) and other products have been mired in reliability-related issues (RF MEMS).

General objectives:

- Form an international team of individuals addressing reliability issues of MEMS and promote open discussion of failure mechanisms
    - Promote IRPS and TDMR as an avenue to publish results
    - Have teleconferences (or email discussions) twice a year
    - Write Newsletter articles twice a year reflecting discussions from the meetings
- Monitor the state-of-the-art technical developments in the field
- Address the multi-disciplinary aspects of MEMS & Microsystems by fostering close relationships to other professional societies (ASME, MRS, SPIE)

The Design for Reliability (DfR) Committee
Chair Dev Raheja

The committee will meet once per month.

On February 2, 2006, the DfR Committee held its first monthly teleconference meeting. At this meeting, the committee reviewed the goals and milestones for the IEEE-RS Design for Reliability (DfR) Committee which were documented by Dev prior to the meeting. The initial edits of the goals and milestones that were discussed by Dev, Sam and Lou at this meeting were documented by Lou, and the draft of these goals and milestones are provided herein.

The goals and milestones for the IEEE-RS Design for Reliability (DfR) Committee are:

GOALS

To train design engineers and system engineers with the processes and tools to find more design weaknesses and improve Design for Reliability in a manner such that:

(a) Mission stopping failures are minimized or reduced over the anticipated life
(b) Minimize or reduce unscheduled downtime
(c) Zero net cost, and the ROI must be more than the DfR investment.

To accomplish these goals:

1. Perform predictions, analysis, assessments, and testing to identify, understand and manage as many failure modes and failure causes as possible, and mitigate risk of these failure modes and causes in the system and product specification.  This will result in many changes to the system specification. The changes to the specification should be correlated to the expected return in terms of risk reduction or risk avoidance.
2. Integrate Reliability with other design specialty disciplines such as maintainability, logistics, safety, and human factors such that the failures in these are identified and mitigated.
3. Perform FMEAs, fault trees, and other analytical tools at several levels. Mitigate all major risks by changing the design and the specifications.
4. Perform Accelerated Life Testing, Highly Accelerated Life Testing (HALT), Alpha and Beta Testing
5. Develop Reliability Design Guidelines that are useful to designers (such as electrical device derating guides, and mechanical tolerance analysis procedures)
6. Anticipate inherent and latent defects introduced in production such as loose connections, poor weld joints, the correct application of grease/lubrication, improper assembly, forgetting to install a component, etc, that are valuable lessons learned to avoid repeating the same mistakes.  Mitigate the risk of such operational occurrences in manufacturing, service or customer use through design changes or specification changes that are as proactive as possible.

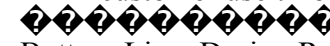
Bottom Line: Design Reliability can be achieved, or Reliability principles and processes can impact improvements in the design through design changes or specification changes.

NEAR TERM MILESTONES

Develop a training module for wide IEEE membership (Dev Raheja, Lou Gullo, Sam Keene, Bob Stoddard)

Write an article as an announcement of this committee  s work through the Reliability Society in the

IEEE-RS newsletter publication.

Present the DfR Body of Knowledge at industry conferences.

Provide DMAIC DFSS tools to the committee to show how they affect reliability.

Information Security Workshop

November 18, 2005

Institute of Information Security, Yokohama, Japan

Reported by Shuichi Fukuda, VP Tech Ops, Tokyo Metropolitan Institute of Technology

Information Security Workshop was held from 2pm to 5 pm on November 18, 2005, at the Institute of Information Security, Yokohama, Japan. This university is a new graduate level university which was set up to respond to the quickly growing needs of information security and many students are sent from industries.

Yokohama is 20 miles west of Tokyo and it is a city where Commodore Matthew Perry of the US Navy came and signed Convention of Kanagawa (later US-Japan Treaty of Amity and Commerce) for Japan to open doors to foreign countries. Until then Japan closed doors for more than 200 years.

This workshop was hosted by the Institute of Information Security with technical sponsorship from IEEE Reliability Society and from IEEE Reliability Society Japan Chapter. The host dean and professor is Dr. Hidehiko Tanaka, who is very famous for 5th generation computing, Ministry of International Trade and Industry and in dependable computing and who is immediate past Dean of Graduate School of Information Science and Technology, University of Tokyo.

The speakers and their titles are,

Jeffrey Voas, "Survey of Information Security Trend"

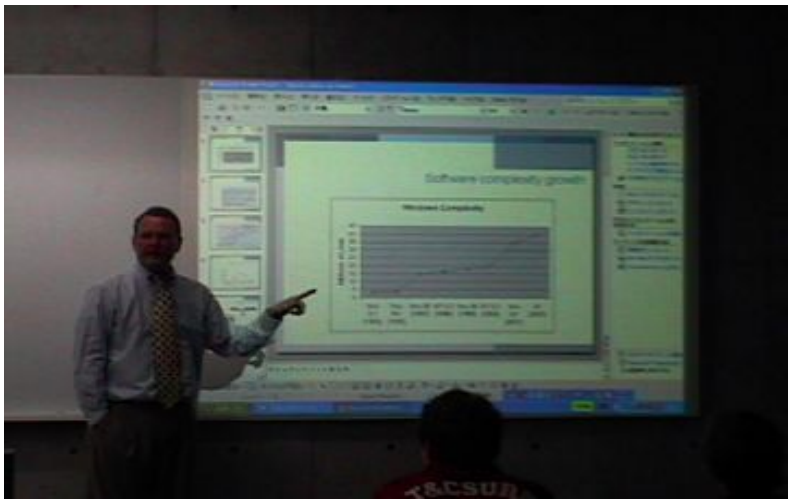

Dick Doyle, "Biotechnology Council"

Sam Keene, "Six Sigma Contributions to Reliability and Security"

Bret Michael, "Computer Security"

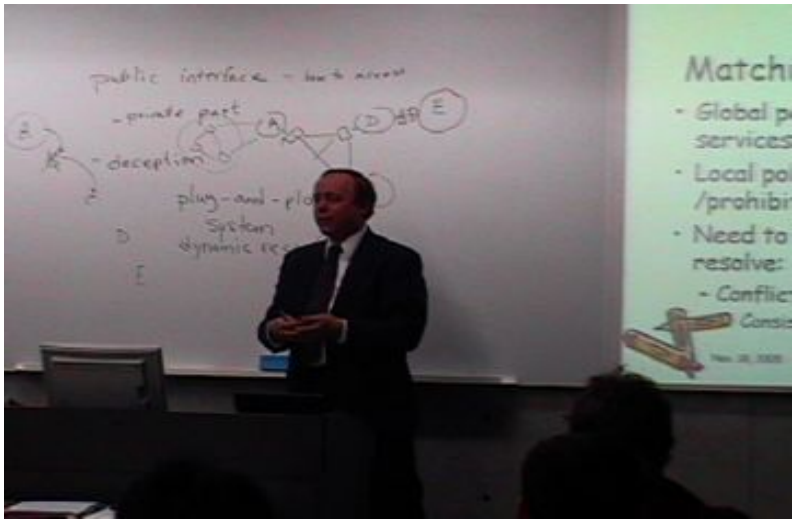

Hidehiko Tanaka, "Japanese Situation and Researches toward Secure Society"

Lively discussion followed after these talks and the number of attendees was 37, mostly from industries.

********** Six Sigma Tutorial

Reported by Shuichi Fukuda, VP Tech Ops

Six Sigma tutorial was held with Sam Keene as tutor at the Community Center, Hino, Tokyo from 1pm to 5 pm on November 21, following Asian Reliability Conference 2005. This area has much in common with the Greater Washington and its Beltway I -495 that encircles Washington, DC. Route 16 also encircles the City of Tokyo and there are many high tech industries along this route.* It has a nickname Technology Advanced Metropolitan Area because the area is called TAMA. The tutorial was held at the very strong request from the major industries located there. 6 executive quality managers attended. This tutorial was hosted by TAMA Regional Development Association with technical sponsorship from IEEE Reliablity Society and its Japan Chapter.*

Useful Information
Transactions on Reliability
Reliability Training
Discussion Forum
Job Postings & Resumes
What is Reliability?
Bylaws & Constitution
Chapters, Committees & Officers
Annual Technology Report
Reliability Society Newsletter
RS Blog
RS LinkedIn
Site Map
E-mail IEEE RS Web Master
JOIN NOW!

Tech Ops Committees

Status of Tech Ops technical committees:

Technologies:

Name	Chair
1) Reliability Design	**vacant**
2) Software Reliability	Sam Keene s.keene@ieee.org
3) MicroElectronics	**vacant**
4) Human Interface	Ken Lasala: k.lasala@ieee.org
5) International Reliability	Joe Fragola fragola@prodigy.net
6) Warranty	Judith Koslov Judith.Koslov@Sun.com
7) Testing and Screening	Anthony Chan h.a.chan@ieee.org
8) Standards and Definitions	Y. Lord yvonne.lord@ngc.com / T. Brogan Thomas_L_Brogan@raytheon.com
9) CAD / CAE	**vacant**
10) Mechanical Reliability	Dick Doyle ddoyle@cts.com
11) System Safety	Takeshia Khoda kohda@vib.kuaero.kyoto-u.ac.jp
12) Assurance	James Bret Michael bmichael@nps.navy.mil
13) Six Sigma Reliability	Sam Keene s.keene@ieee.org
14) Maintainability	Stefan Mozar s.mozar@ieee.org
15) Emerging (new) Technology	**vacant**

Systems:

16) Aerospace and Defense	Lon Chase l.chase@ieee.org
17) Automotive	Guangbin Yang gyang1@ford.com
18) Information Technology & Communications	**vacant**
19) Energy Systems	Mark Lively MbeLively@aol.com
20) Medical	Patrick Corcoran patcorkshome@yahoo.com
21) Consumer Electronics	Fred Schenkelberg fms@hp.com
22) Sensors	Ken Lasala (acting) k.lasala@ieee.org
23) Industrial Systems	Hiroshi Yajima yajima@sdl.hitachi.co.jp

2006 IEEE-USA Leadership Workshop

The 2006 IEEE-USA Leadership Workshop: Is It True ‘The World Is Flat?’ is scheduled for 3-5 March 2006 at the Hyatt Regency Hotel at Union Station in St. Louis, MO.

This year’s workshop will focus on the global market and what that means for you and your local members.
Our sessions will be geared toward helping you and your local members understand and prepare for the Flattening of the Global Market.’ This year we will have plenary sessions that describe IEEE-USA’s Career, Member, Professional Activities and Government Relations Programs.’ The afternoon sessions will be divided into 4 tracks:

- Member Professional Activities Conferences (Mechanics and MPAC Programs)
- Government Relations: What You Can Do to Protect Your Interest
- Local Programs: Best Practices to Enhance Your Local Members' Competitiveness
- Roadmap or Roadkill: Employment and Career Advice

During the weekend, members will be challenged to think about the changes in the global environment within which they work.’ We will provide interactive workshops that will offer new strategies to think about their role in society and how they can make a difference in their own lives and careers. In addition, participants will have the opportunity to hear from IEEE and IEEE-USA President-Elect Candidates, take part in the IEEE-USA Awards Dinner and Ceremony, and make recommendations to the IEEE-USA Board of Directors on the last day of the workshop.’ For more information, please go to http://www.ieeeusa.org/calendar/conferences/2006workshop/.

2007 Reliability and Maintainability Symposium
Call for Papers

The Reliability and Maintainability Symposium (RAMS) is the foremost symposium in the US and possibly the world covering topics of reliability, maintainability, safety and risk.• The theme of the 2007 RAMS is Reliability and Maintainability in the New Frontier.

RAMS is sponsored by IEEE Reliability Society.• As a result, the IEEE Reliability Society has a vested interest that the papers and tutorials at RAMS address issues that are of interest and relevant to our members.• There is a call for papers posted at:

www.rams.org/call/call.2007.pdf

RAMS is always looking for papers with new perspectives. It also needs papers that show how reliability, maintainability, safety and risk are applied to real components, systems and networks to make them better.•

Please submit a paper or tutorial to 2007 RAMS.• Submissions are due by April 17.•

13th INTERNATIONAL SYMPOSIUM ON THE PHYSICAL AND FAILURE ANALYSIS OF INTEGRATED CIRCUITS

IPFA 2006

3 - 7 July 2006
Meritus Mandarin Singapore

CALL FOR PAPERS
SUBMISSION DEADLINE EXTENDED

The 13th International Symposium on the Physical and Failure Analysis of Integrated Circuits (IPFA 2006) is organised by the IEEE Reliability/CPMT/ED Singapore Chapter in co-operation with the Centre for Integrated Circuit Failure Analysis and Reliability (CICFAR) of the National University of Singapore (NUS). The Symposium is technically co-sponsored by the IEEE Electron Device Society and IEEE Reliability Society.

IPFA 2006 will be devoted to the fundamental understanding of the physical mechanisms of semiconductor device failures and issues related to semiconductor device reliability and yield, especially those related to advanced process technologies. The Technical Programme Committee is inviting papers related, but not limited to, the following areas:

- FEOL (gate dielectrics, NBTI, hot carriers etc.)
- BEOL (Cu and Al interconnects, low-k and ultra-low-k, stress migration and electromigration etc.)
- Packaging (flip chip, system-on-chip, SIP etc.)
- Novel device architectures, design, processes, and characterization (SGOI, FinFET, nanowires, CNT etc.)
- Advanced instrumentation or methodology for Failure Analysis
- Advances in reliability evaluation and approaches (methodology for novel new devices, design-in/build-in reliability, wafer level reliability etc.)

Exchange Papers
In a paper exchange arrangement with ESREF and ISTFA, the Best Papers from ESREF 2005 and ISTFA 2005 will be presented at IPFA 2006, while the best papers in reliability and failure analysis from IPFA 2006 will be presented at the corresponding conferences.

Tutorials
In conjunction with the technical symposium, two days of tutorials will be conducted.

Exhibition
A 3-day exhibition of analysis equipment and services will be held concurrently with the Symposium.

SUBMISSION GUIDELINES

Prospective authors are requested to submit **one cover page and a two-page summary** (includes text and figures) of their previously unpublished and original research work.

The cover page should contain the following information:

1. Title of the work.
2. Name, affiliation, and address of each author.
3. Telephone number, fax number and e-mail address of the corresponding author
4. An abstract not exceeding 50 words.
5. The category/categories (FEOL, BEOL, Packaging, Advanced instrumentation, etc.) that you would like your submission to be considered under.

The summary section of the submission **should not** contain any reference to the authors or their affiliation, and should present the content of the submission according to the following sub-headings:

1. Brief introduction to the background and motivation/objectives of the work.
2. Experimental results, analysis and discussion.
3. Summary of the findings, highlighting their impact, novelty and importance.
4. Supporting figures, tables, and references.

All submissions must be in English. Please e-mail your submission in **Adobe PDF format** to the IPFA Secretariat (ipfa@pacific.net.sg) by **3 February 2006**. Please limit your submission file size to 2 MB. **Hardcopy submissions will not be accepted.** For further details please contact the technical program chair.

Authors of papers that have been accepted for presentation will be notified by 14 March 2006. Upon notification of acceptance, authors will be asked to submit a final manuscript (to be submitted by 2 May 2006) such that it can be published in the Symposium Proceedings and presented at the symposium.

IMPORTANT DATES:		
	3 February 2006	Submission of Summary and Abstract
	14 March 2006	Notification of Paper Acceptance
	2 May 2006	Submission of Final Manuscript

LATE BREAKING NEWS MANUSCRIPTS

The conference also accepts important findings as late papers. Full-papers, no longer than 4 pages, should be submitted by **14 April 2006** for consideration. The acceptance of such papers is limited to break-through findings and is subject to space availability and scheduling considerations. Accepted late papers will be included in the conference proceedings and in the technical presentations at the conference.

Conference Chair
Alastair Trigg
Institute of Microelectronics, Singapore
Email: alastair@ime.a-star.edu.sg
Tel: +65 6770 5455

Technical Program Chair
Tung Chih-Hang
Institute of Microelectronics, Singapore
Email: chihhang@ime.a-star.edu.sg
Tel: +65 6770 5370

Website: http://www.ieee.org/ipfa

Call for Papers
The First IEEE International Conference on
System Integration and Reliability Improvements

SIRI 2006

Hanoi, Vietnam
6-8 December 2006

Sponsored by: IEEE Reliability Society
IEEE Systems, Man and Cybernetics Society

General Chairs

Samuel Keene
s.keene@ieee.org

Hoang Pham
Rutgers University
hopham@rci.rutgers.edu

Program Chairs

Jian Chen
Tsinghua University
jchen@mail.tsinghua.edu.cn

Eric Wong
University of Texas at Dallas
ewong@utdallas.edu

Local Arrangements Chair

Duc H. Nguyen
Vietnam National University

Finance Chair

Alan Street
astreet@qualcomm.com

Publicity Chair

Min Xie
National Univ. of Singapore
mxie@nus.edu.sg

Web Master

W. Art Chaovalitwongse
Rutgers University

Hai Hu
University of Texas at Dallas

Asian Liaison:

Tsu-Tian Lee
National Taipei Univ of Tech
ttlee@cn.nctu.edu.tw

Conference website
http://paris.utdallas.edu/siri

BACKGROUND:

SIRI focuses on the theory and practice of Systems Integration with special emphasis on the orderly and reliable introduction of emerging technologies into world class products. The conference scope includes techniques and practices to (1) gather and validate product requirements, (2) perform technology assessment, opportunity and risk analysis, and (3) apply the best development practices to assure successful product realization. This will be big enough in attendance to represent major SIRI topics, but small enough to provide an in-depth representation of theory or practice in these areas. We hope to have Industry and academic participation, product and device suppliers, as well as a healthy mixture of theory and practice.

CALL FOR CONTRIBUTIONS:

- ✓ Lessons Learned on developing new products, including success stories and pitfalls found in developing, releasing and supporting fielded products
- ✓ Requirements collection strategies and validation
- ✓ New chip technologies
- ✓ Embedded systems
- ✓ Impact of regulations on product design
- ✓ Six Sigma contributions to World Class product development
- ✓ Building security into products
- ✓ Software system verification
- ✓ Integrating COTS components into new products
- ✓ System integration for human computer interaction
- ✓ Maintaining COTS components through development and field support
- ✓ Support strategies for fielded systems
- ✓ Role of simulation and prototypes
- ✓ Accelerated testing to demonstrate life capability
- ✓ Physics of Failure (POF) contribution to robust product design
- ✓ Experimental design considerations
- ✓ Building "Green Systems"
- ✓ Mitigating EMC and other environmental effects on new designed equipment
- ✓ Supply chain management
- ✓ Design tools and automation

IMPORTANT DATES:

Submission of proposal for tutorial sessions: April 15, 2006
Submission of invited sessions: April 15, 2006
Regular papers, written in English, should be submitted electronically: June 15, 2006
Notification of Acceptance/Rejection: August 1, 2006
Final camera-ready papers: September 15, 2006

Accepted papers will be published in the Conference Proceedings. Outstanding papers will be considered for publication in special issues of the IEEE Transactions on Reliability and Transactions on Systems, Man and Cybernetics.

IEEE Transactions on Reliability,Special Issue on Reliability Studies on Nanotechnology

Guest Editors: J.-C. Lu, W. R. Tonti and S.-L. Jeng

AIM

Over the past two decades, the ability to measure and manipulate matter at the scale of atoms and molecules has led to the discovery of novel materials and phenomena. These advances underlie the multidisciplinary areas of research and development known today as ?nanotechnology.? Now, nano-technology has been recognized as a revolution that will impact virtually every sector of our economy and our daily lives. In the nano era, device sizes will be in the range of several nanometers, leading to a potential for high degree of failures, due to (i) special physics and chemistry properties of materials in nano scale, (ii) transient faults resulting from reduced noise tolerance at reduced voltage and current levels in device or system design, (iii) faults due to ageing in the processes of using molecular and other techniques for creating nano-devices, and (iv) manufacturing defects.

Scope

Contributions should discuss the application of reliability methods in nanotechnology research. Interdisciplinary papers are particularly welcome. Possible topics of applications, within this scope, include but are not limited to:

? Reliability of nanostructured materials

? Reliability design in nanoscale products and systems

? Reliability testing and failure-mode analysis for nano-devices and ?systems

? Reliability, analysis and fabrication of Self-Assembled-Systems

? Aging, degradation, failure-rate, reliability models for nano-devices and ?systems

? Lifetime assessment techniques of nanoscale products

? Manufacturing quality issues related to reliability of nano-products

? Reliability standards for nanoscale products and systems

? Trade-offs between design, reliability and performance of nanoscale products

? Reliability prediction and assurance considering variations in device manufacturing performed by different supply-chain organizations.

Submission Guidelines

Papers must be submitted to the **guest editor** J.-C. Lu at JCLU@isye.gatech.edu

Although there is no restriction on length, we would prefer shorter papers (20 pages or less) to longer ones, for the sake of greater diversity and more thorough reviewing. Authors are therefore encouraged to be as concise as possible.

Electronic submissions are encouraged, and may be sent as one email. The message should contain the whole paper in PDF or Word. Authors who cannot meet these requirements should submit five hard copies by post instead.

All submitted papers will be refereed according to the usual *IEEE Trans. on Reliability* refereeing process.

To aid planning and organization, we would appreciate an email or a letter of intent to submit a paper (including author information, a tentative title and abstract, and an estimated number of pages) as early as possible.

Important Dates

Official announcement of call-for-papers in the *IEEE Trans. on Reliability*	June, 2005
Letter of intent	September 1, 2005
Submission of papers:	May 1, 2006
Invitation for paper revision	August 15, 2006
Possible second revision	November 30, 2006
Notification of acceptance:	January 5, 2006
Delivery of final LaTeX or Word file:	January 30, 2007
Publication of special issue:	June, 2007

Guest Editors' Addresses

Dr. Jye-Chyi Lu
Georgia Institute of Technology
School of Industrial and Systems Engineering
765 Ferst Drive
Atlanta, GA 30332-0205, U.S.A.

Dr. William R. Tonti,
IBM Microelectronics
1000 River Street
Essex Junction, VT 05452
M/S 861-H
802 769 6561

phone: 404-894-2318
fax: 404-894-2301
JCLU@isye.gatech.edu

wtonti@us.ibm.com

Dr. Shuen-Lin Jeng
Tunghai University
Dept. of Statistics
No. 181, Sec. 3, Taichung-kan Rd.,

Taichung, Taiwan, R.O.C. 407-04
phone: (886) 4-23590206 Ext 10
fax: (886) 4-23594710
sljeng@mail.thu.edu.tw

The 9th International Conference on Information Fusion will be held in Florence, Italy, on 10-13 July 2006.
The objective of the conference is to provide a forum to discuss advances and applications for fusion technologies. The conference will feature keynote speeches, special sessions on topics of current interest, a tutorials program to assist new researchers in the field, and a student paper award.

Prospective authors are invited to submit 4-8 page papers by 15 January 2006. The Call for Papers (PDF format) is available for download on the conference website www.fusion2006.org. Submission instructions and paper templates will be soon provided on the web site. Proposals for special sessions, panel discussions and tutorials are encouraged.

Please note the following important deadlines:

Special session proposal 1 December 2005
Tutorial proposal 15 January 2006
Regular paper submission 15 January 2006
Acceptance of papers 1 April 2006
Final papers 15 May 2006
Early registration 1 June 2006

For further and updated information, please visit the conference website www.fusion2006.org.

The 9th International Conference on Information Fusion
Florence, 10 – 13 July 2006

CALL FOR PAPERS

Organizing Committee

Executive Chair

Alfonso Farina
SELEX – Sistemi Integrati
Rome, Italy

General Co-Chairs

Stefano Coraluppi
NATO Undersea Research Centre
La Spezia, Italy

Peter Willett
University of Connecticut
Storrs CT, USA

Technical Co-Chairs

Craig Carthel
NATO Undersea Research Centre
La Spezia, Italy

Pierfrancesco Lombardo
University of Rome *La Sapienza*
Rome, Italy

Local Arrangements and Finance Chair

Alberto Baldacci
NATO Undersea Research Centre
La Spezia, Italy

Publications Chair

Robert Lynch
Naval Undersea Warfare Centre
Newport RI, USA

Tutorials Chair

Stefano Marano
University of Salerno
Salerno, Italy

Conference Contact Information

Stefano Coraluppi
coraluppi@nurc.nato.int
+39 0187 527 304

Peter Willett
willett@engr.uconn.edu
+1 860 486 2195

www.fusion2006.org

Overview. The 9th International Conference on Information Fusion will be held in Florence, Italy, at the *Convitto della Calza* Convention Centre. Authors are invited to submit papers describing advances and applications in information fusion, with submission of non-traditional topics encouraged.

Conference Site. Lying in the heart of Tuscany, surrounded by gentle green hills, Florence is a unique treasure chest of works of art. Florence is the home of Dante, Giotto and Botticelli. Leonardo da Vinci, Michelangelo, and Raphael all came to Florence to learn about art and to teach it. Renaissance buildings, churches and museums like the *Uffizi* gallery provide an extraordinary voyage through the history of art. The coastline is approximately an hour's distance, as are the notable Italian centers of Pisa and Siena. Florence is served by a modern international airport.
The conference venue is the *Convitto della Calza*, a former monastery built in the 14th century. It is strategically located in the heart of the historical center, surrounded by remarkable works of the Renaissance, and close to the *Boboli* Gardens and *Palazzo Pitti*.

Topics of interest include (but are not limited to) the following:

1. Foundational tools
Probability theory; non-Bayesian approaches to uncertainty representation; random sets; fuzzy logic; risk-sensitive approaches; fusion modeling; agents; genetic optimization.

2. Technological advances
Sensor modeling (radar, active and passive sonar, acoustic, seismic, magnetic, optical, visual, infrared); fusion-related hardware, software and communications technology.

3. Algorithmic developments
Classification; data mining; nonlinear filtering and smoothing; contact-based tracking algorithms; combined detection/tracking; resource management; distributed fusion; active and passive data fusion; data registration; image fusion; database fusion.

4. Application areas
Command, Control, Communications, Computers, Intelligence, Surveillance and Reconnaissance (C4ISR); network centric warfare; decision support; situation assessment; computer vision; economics and finance; condition monitoring; medical diagnostics and biological systems; robotics; intelligent transportation systems; security.

Paper Submissions. Prospective authors are invited to submit 4-8 page papers through the conference website (www.fusion2006.org), where paper templates and submission instructions are available, by 15 January 2006.

Special Session Proposals. Proposers are invited to submit by email (coraluppi@nurc.nato.int, willett@engr.uconn.edu) the theme of the special session, as well as the list of committed papers, by 1 December 2005.

Tutorial Proposals. The first day of the conference will be devoted to tutorials on information fusion. Organizers for proposed tutorials are invited to submit by email (marano@unisa.it) a title and description for their tutorial, by 15 January 2006.

Student Paper Program. Fusion 2006 is featuring a student paper program to encourage the involvement of young engineers and scientists in information fusion research. Conference fees will be waived for the leading author of the best paper. Further details are available at the Conference website.

Invited Speakers. Fusion 2006 will include the following invited talks:

- Dr. Nils Sandell (BAE Systems Advanced Information Technologies), *Fusion Technology and Applications: A Retrospective and Some Thoughts about the Future.*
- Dr. Marcel Hernandez (QinetiQ), *Performance Measures for Sensor Management: Computationally Efficient Formulations and Associated Applications.*
- Dr. Roy Streit (Metron), *The PMHT and Related Applications of Mixture Densities.*

Important deadlines

Special session proposal	1 December 2005
Tutorial proposal	15 January 2006
Regular paper submission	15 January 2006
Acceptance of papers	1 April 2006
Final papers	15 May 2006
Early registration	1 June 2006

RISK MANAGEMENT AND SYSTEM DEPENDABILITY & SAFETY

IMdR-SdF

CALL FOR PAPERS

THEME OF THE SYMPOSIUM

RISKS & PERFORMANCES

Efficient risk management involves not only taking actions to exercise preventive and protective capacities, but also engaging an offensive process in order to improve efficiency, quality and availability. Safety and performance are therefore objectives which reinforce each other to sustain industries and services.

Many examples in industrial sectors show that the appropriation of a risk management approach procures greater reactivity and higher performances in an entity. This improvement is obtained through a constant effort at controlling the organization and its processes which are key components for performance.
[un espace de trop]
In selecting the theme of "Risks and Performances" for our Symposium, I hope to convince European and international socio-economic actors - industrials, investors, decision-makers, authorities, universities, research laboratories, and other stakeholders - who want to improve their performances, to promote the idea that risk analysis and management issues are an integral part of an organisation's strategic orientation, as equal as marketing, financial and production issues. All the following sectors are concerned: transport, energy and environment, automotive, petrochemicals, chemicals, agro-industry, aerospace, defence, telecommunications, mining industries, information systems, textile, finances...

The programme will put the accent on communications focusing on convergences and synergies between risk prevention and protection strategies and performance-improvement strategies

- The topics might therefore include:
- Relevance of allocating risk-reducing resources related to criticity;
- Consistant management of uncertainties as a function of the issues at stake;
- Management of component ageing and examples of availability, maintenance and safety policies integrating the obsolescence factor;
- Explanation of renewal policies related to obsolescence;
- Dependability methods and tools applied more particularly to complex systems and systems including hardware and software;
- Integration of social, organisational and human factors in technical decisions and management;
- Transverse and global risk analysis and decision aids;
- Vigilance culture;
- Crisis anticipation and management;
- Feedback from experience on technical and organisational aspects;
- Performance and risk management indicators;
- Cost-profit approaches in risk management;
- Economic intelligence approaches;
- ...

The topics above may be dealt with several standpoints:
Industrial applications, strategies, innovations, methodological approaches, tools, theses and in-depth studies, debate ... Risk and performance management is a major challenge for industries, services and research.

Laurent Magne
Scientific committee Chairman

SYMPOSIUM COMPONENTS

- **The sessions**, at the center of the symposium, are organised in **oral sessions and poster sessions**.
- **The industrial exhibition** offers to exhibitors a showcase for their achievements.
- **The tutorials**, scheduled at the beginning of the symposium, are an opportunity for transmitting knowledge.
- **The round table** is an opportunity for a broader debate.
- **The plenary sessions deal with** topical subjects.
- **The workshops** represent places for sustained dialogue on precise subjects.
- **The university-industry forum** enhances possibilities for initial or continuing education & training.
- **The technical visits**, at the end of the symposium, afford access to various companies' premises.
- **A dinner** enables participants to meet and mix in a more casual atmosphere.
- **The golden λμ** will be awarded to the best industrial and academic communications.

SCHEDULE

Deadline for abstracts : 23 DECEMBER 2005

Notification to selected authors : 20 MARS 2006

Deadline for complete texts : 12 MAY 2006

DOMAINS

- Accidents
- Decision aids
- Cost/profit
- Life time and prolongation
- Human factors
- Reliability of structures
- Reliability of Information Systems
- Optimisation
- Impacts of organisations
- Legacy
- Maintenance
- Project risks and financial risks
- Simulation
- Standardisation
- Feedback from experience
- Logistics support
- Advanced statistics
- System dependability and safety
- Safety
- Environmental and health risks

GUIDELINES FOR CONTRIBUTORS

The official language at the symposium is French. However, as the Organisation Committee wishes to confer a European dimension, communications focusing on European or trans-national issues are strongly encouraged. It will also be feasible to organise English communications. All the communications, either oral or poster, must include an abstract in English. Selected papers will be published in a scientific journal. Authors wishing to submit a communication are requested to send to the symposium secretariat by **23 DECEMBER 2005** an abstract in French in the form of a computer file (WORD, PDF) between 600 and 1200 words long. The abstract – which must contain no formulae and no illustration – is to be mailed (on floppy disk) or e-mailed to **lm15@imdr-sdf.asso.fr**. The submitted paper must **follow exactly the structure** described below (selection criterion). In particular, the section titles must appear exactly as shown.

GENERAL INFORMATION

- **Title :** as short and clear as possible.
- **Name of author(s) :** main author underlined.
- **Author(s)' contact details :** company, address, telephone, fax, e-mail.
- **Key words :** a list is given in the abstract template. Choose those that correspond most closely to the paper you are submitting; you are free however to add other key words considered informative and meaningful.
- **Domains :** a list is available on the symposium site. If your paper does not fit in any of those listed, indicate a domain you consider appropriate.
- **Type of presentation preferred :** Oral, Poster or Either.

SUBMISSIONS OF COMMUNICATIONS: abstract in five sections

- **Objectives :** goals of the work presented in the paper
- **Context :** presentation of the subject, scope and stakes at issue
- **Method :** handling of the decision problem; innovative aspects
- **Results :** feedback, findings, successes or failures, lessons learned, etc.
- **References :** provide recent references (maximum 3).

Special attention will be paid to submissions explicitly addressing the decision-making angle and tackling the subject from an innovative perspective. Special sessions will be reserved for the theoretical and mathematical aspects.
You will find on the symposium website **http://imdr-sdf.asso.fr/lm15**, under the heading "Guidance for Contributors", a template for presenting an abstract, together with a completed example, as well as a host of other information about the λμ15 Symposium.

SUBMISSIONS OF TUTORIALS

Anyone wishing to propose a tutorial should submit the subject, goal and a tentative programme to the Symposium secretariat.

SYMPOSIUM ORGANIZING COMMITTEE

The INSTITUT pour la MAÎTRISE des RISQUES et la SÛRETÉ DE FONCTIONNEMENT (IMdR-SdF)

Since 1989, Institut de Sûreté de Fonctionnement, later called Institut pour la **M**aîtrise des **R**isques et la **S**ûreté de **F**onctionnement has contributed to making system dependability and safety part of a sector contributing to the competitiveness of social and economic actors. This has been done, among other ways, by providing methods and tools available to anyone, and circulating information on the subject, as well as by means of a substantial library housed in its Orientation and Documentation Centre and on its web site: **www.imdr-sdf.asso.fr**.
IMdR-SdF is the guarantee for the scientific content of the symposium which gathers every two years, attracting over 500 participants of industrial, scientific, academic and service companies.

The Symposium Organizing Committee, chaired by Mr Jean-Louis RICAUD, Vice-Chairman of RENAULT Group, includes:
- IMdR, represented by its President, Guy PLANCHETTE, and its Treasurer, Philippe THIREAU (ASTRIUM),
- a representative of SEE, Jacques GIRARD,
- the following partners:

PARTNERS

AIR LIQUIDE	Jean-Luc MONEIN	**CEA**	Jean-Luc CHABOT
EDF	Laurent MAGNE	**PSA**	Annie BRACQUEMOND
RATP	Jacques VALANCOGNE	**RENAULT**	Bruno COMPIN
SNCF	Michel ETIENNE	**SNECMA**	Serge EURY

SYMPOSIUM SECRETARIAT

Sophie Latrive
Phone: + 33 (0)1 41 49 04 15
Fax: + 33 (0)1 41 49 04 14
E-mail: lm15@imdr-sdf.asso.fr
Web: http://imdr-sdf.asso.fr/lm15

SCIENTIFIC COMMITTEE

CHAIRMAN
Laurent MAGNE
EDF

SCIENTIFIC COMMITTEE BUREAU:
Jean François AUBRY
Institut de Sûreté Industrielle
Marc BOUISSOU
EDF – R&D
Jean-Louis BON
Polytech Lille
Jean-Luc CHABOT
CEA - CESTA
Elie FADIER
INRS
Pierre-Etienne LABEAU
Université Libre de Bruxelles (Belgique)
Patrice KAHN
ADVALIENCE
Dominique PERSON SILHOL
RATP - MRF
Jean-Pierre PETIT
IMdR-SdF
Christian TRIOLAIRE
IMdR-SdF
Frédérique VALLÉE
MATHIX

SCIENTIFIC COMMITTEE
Emmanuel ARBARETIER
APSYS
Jean-François BARBET
SECTOR
Nicolas BECKER
PSA Peugeot Citroën
Younès BENANTEUR
Ecole Nationale de Santé Publique
François-Jérôme BETOURNE
CEA
Annie BRACQUEMOND
PSA Peugeot Citroën
Gilles CELEUX
INRIA
Eric CHATELET
UTT
François COLETTI
Université de la Méditerranée
Bruno COMPIN
RENAULT
Gérard COUVREUR
INRETS
Jean-Yves DAUXOIS
Université de Franche-Comté
Eric de TOCQUEVILLE
LGM Consultants
Pierre DEHOMBREUX
Faculté Polytechnique de Mons
Gilles DELEUZE
EDF
Thierry DELION
Consultant
Nicolas DEVICTOR
CEA - Cadarache
Bernard DUMON
Université d'Angers
Jacques DURAND
ALSTOM
Yves DUTUIT
Université Bordeaux 1
Mohamed EID
CEA
Aline ELLIA-HERVY
Framatome ANP
Jean-Pierre GAUCHI
INRA
Olivier GAUDOIN
Institut National Polytechnique de Grenoble
Rémy GAUTIER
Ecole Nationale Supérieure d'Arts et Métiers
Claude GIGOUX
IMdR-SdF
Fabrice GUERIN
Université d'Angers
Tony HUTINET
Dassault Data Services
Karama KANOUN
LAAS
Armelle KOSTADINOV
Ligeron S.A.
Virgile LA LUMIA
Technicatome
Chidung LAC
France Télécom - R&D
André LANNOY
IMdR-SdF
Emmanuel LARDEUX
AIR LIQUIDE
Bruno LE BRETON
DGA
Isabelle LEGRAS
BULL
Maurice LEMAIRE
IFMA - LaRAMA
Alain LEROY
Fractal Système
Nikolaos LIMNIOS
UTC
Patrick LYONNET
ENISE
Raymond MARIE
IRISA
Agnès MATHEVET
SNECMA
Sophie MERCIER
Université de Marne-la-Vallée
Yves MORTUREUX
SNCF
Marie-Madeleine OUDIN-DARRIBÈRE
IMdR-SdF
Jean-Luc PELLETIER
Technicatome
Laurent PERRIN
ENSIC INPL Nancy
Henri PROCACCIA
ESReDA
Alain RAGOT
CNES
Antoine RAUZY
CNRS
Fouad RIANE
Facultés Universitaires Catholiques de Mons
Jacques RINGLER
RINGLER Consultant
Jacques RIOUT
CETIM
Michel ROUSSIGNOL
Université de Marne-la-Vallée
Marc SASSATELLI
CNIM
Walter SCHON
UTC
Jean-Pierre SIGNORET
TOTAL
Florence SOURGET
SNCF
Marie-Christine SUHNER
CRAN - Université Henri Poincaré - NANCY 1
Daniel TABET
IMdR-SdF
Christian TAHON
Université Valenciennes
Alain TEXIER
TECHSPACE AERO
Jacques VALANCOGNE
RATP
Marc VOISIN
SNPE
Un représentant du CST
SEE